IBIS

(I/O Buffer Information Specification)

Version 4.1

Ratified January 30, 2004

|==========
|==========
| I/O Buffer Information Specification (IBIS) Version 4.1 (January 30, 2004)
|
| IBIS is a standard for electronic behavioral specifications of integrated
| circuit input/output analog characteristics.
|==========
|==========
|
| T A B L E O F C O N T E N T S
|
|==========
|==========
|

| Section 1 .... GENERAL INTRODUCTION
| Section 2 .... STATEMENT OF INTENT
| Section 3 .... GENERAL SYNTAX RULES AND GUIDELINES
| Section 4 .... FILE HEADER INFORMATION
| Section 5 .... COMPONENT DESCRIPTION
| Section 6 .... MODEL STATEMENT
| Section 6a ... ADD SUBMODEL DESCRIPTION
| Section 6b ... MULTI-LINGUAL MODEL EXTENSIONS
| Section 7 .... PACKAGE MODELING
| Section 8 .... ELECTRICAL BOARD DESCRIPTION
| Section 9 .... NOTES ON DATA DERIVATION METHOD
|

Section 1 5
Section 2 6
Section 3 8
Section 4 10
  [IBIS Ver] 10
  [Comment Char] 10
  [File Name] 10
  [File Rev] 11
  [Date], [Source], [Notes], [Disclaimer], [Copyright] 11
Section 5 12
  [Component] 12
  [Manufacturer] 12
  [Package] 12
  [Pin] 13
  [Package Model] 14
  [Alternate Package Models], [End Alternate Package Models] 15
  [Pin Mapping] 15
  [Diff Pin] 18
  [Series Pin Mapping] 19
  [Series Switch Groups] 20
  [Model Selector] 21
Section 6 24
  [Model] 24
  [Model Spec] 28
  [Receiver Thresholds] 34
  [Add Submodel] 37
  [Driver Schedule] 38
  [Temperature Range] 41
  [Voltage Range] 41
  [Pullup Reference] 42

[Pulldown Reference] 42
[POWER Clamp Reference] 42
[GND Clamp Reference] 42
[External Reference] 43
[TTgnd], [TTpower] 43
[Pulldown], [Pullup], [GND Clamp], [POWER Clamp] 44
[Rgnd], [Rpower], [Rac], [Cac] 47
[On], [Off] 48
[R Series], [L Series], [Rl Series], [C Series], [Lc Series], [Rc Series] .. 49
[Series Current] 50
[Series MOSFET] 51
[Ramp] 54
[Rising Waveform], [Falling Waveform] 54
[Test Data] 57
[Rising Waveform Near], [Falling Waveform Near],
[Rising Waveform Far], [Falling Waveform Far],
[Diff Rising Waveform Near], [Diff Falling Waveform Near],
[Diff Rising Waveform Far], [Diff Falling Waveform Far] 58
[Test Load] 59
Section 6a 62
[Submodel] 63
[Submodel Spec] 63
[GND Pulse Table], [POWER Pulse Table] 65
Section 6b 77
[External Model], [End External Model] 84
[External Circuit], [End External Circuit] 101
[Node Declarations], [End Node Declarations] 108
[Circuit Call], [End Circuit Call] 109
Section 7 115
[Define Package Model] 116
[Manufacturer] 116
[OEM] 116
[Description] 117
[Number Of Sections] 117
[Number Of Pins] 117
[Pin Numbers] 117
[Model Data] 120
[End Model Data] 120
[Resistance Matrix], [Inductance Matrix], [Capacitance Matrix] 120
[Row] 122
[Bandwidth] 123
[End Package Model] 124
Section 8 128
[Begin Board Description] 129
[Manufacturer] 129
[Number Of Pins] 129
[Pin List] 130
[Path Description] 130
[Reference Designator Map] 136
[End Board Description] 136
[End] 136
Section 9 137

Section 1

G E N E R A L I N T R O D U C T I O N

This section gives a general overview of the remainder of this document.

Sections 2 and 3 contain general information about the IBIS versions and the general rules and guidelines. Several progressions of IBIS documents are referenced in Section 2 and in the discussion below. They are IBIS Version 1.1 (ratified August 1993), IBIS Version 2.1 (ratified as ANSI/EIA-656 in December 1995), IBIS Version 3.2 (ratified as ANSI/EIA-656-A in October 1999), IBIS Version 4.0 (ratified in July 2002), and this document, IBIS Version 4.1 (ratified in January 2004).

The functionality of IBIS follows in Sections 4 through 8. Sections 4 through 6 describe the format of the core functionality of IBIS Version 1.1 and the extensions in later versions. The data in these sections are contained in .ibs files. Section 7 describes the package model format of IBIS Version 2.1 and a subsequent extension. Package models can be formatted within .ibs files or can be formatted (along with the Section 4 file header keywords) as .pkg files. Section 8 contains the Electrical Board Description format of IBIS Version 3.2. Along with Section 4 header information, electrical board descriptions must be described in separate .ebd files.

Section 9 contains some notes regarding the extraction conditions and data requirements for IBIS files. This section focuses on implementation conditions based on measurement or simulation for gathering the IBIS compliant data.

|==========
|==========
|

Section 2

|
| S T A T E M E N T O F I N T E N T
|
|==========
|==========
|
| In order to enable an industry standard method to electronically transport
| IBIS Modeling Data between semiconductor vendors, EDA tool vendors, and end
| customers, this template is proposed. The intention of this template is to
| specify a consistent format that can be parsed by software, allowing EDA
| tool vendors to derive models compatible with their own products.
|
| One goal of this template is to represent the current state of IBIS data,
| while allowing a growth path to more complex models / methods (when deemed
| appropriate). This would be accomplished by a revision of the base
| template, and possibly the addition of new keywords or categories.
|
| Another goal of this template is to ensure that it is simple enough for
| semiconductor vendors and customers to use and modify, while ensuring that
| it is rigid enough for EDA tool vendors to write reliable parsers.
|
| Finally, this template is meant to contain a complete description of the I/O
| elements on an entire component. Consequently, several models will need to
| be defined in each file, as well as a table that equates the appropriate
| buffer to the correct pin and signal name.
|
| Version 4.0 of this electronic template was finalized by an industry-wide
| group of experts representing various companies and interests. Regular
| "EIA IBIS Open Forum" meetings were held to accomplish this task.
|
| Commitment to Backward Compatibility. Version 1.0 is the first valid IBIS
| ASCII file format. It represents the minimum amount of I/O buffer
| information required to create an accurate IBIS model of common CMOS and
| bipolar I/O structures. Future revisions of the ASCII file will add items
| considered to be "enhancements" to Version 1.0 to allow accurate modeling
| of new, or other I/O buffer structures. Consequently, all future revisions
| will be considered supersets of Version 1.0, allowing backward
| compatibility. In addition, as modeling platforms develop support for
| revisions of the IBIS ASCII template, all previous revisions of the template
| must also be supported.
|
| Version 1.1 update. The file "ver1_1.ibs" is conceptually the same as the
| 1.0 version of the IBIS ASCII format (ver1_0.ibs). However, various
| comments have been added for further clarification.
|
| Version 2.0 update. The file "ver2_0.ibs" maintains backward compatibility
| with Versions 1.0 and 1.1. All new keywords and elements added in Version
| 2.0 are optional. A complete list of changes to the specification is in the
| IBIS Version 2.0 Release Notes document ("ver2_0.rn.txt").
|
| Version 2.1 update. The file "ver2_1.ibs" contains clarification text
| changes, corrections, and two additional waveform parameters beyond Version
| 2.0.

```
| Version 3.0 update.  The file "ver3_0.ibs" adds a number of new keywords and
| functionality.  A complete list of functions can be found on eda.org under
| /pub/ibis/birds/birddir.txt showing the approved Buffer Issue Resolution
| Documents (BIRDs) that have been approved for Version 3.0.
|
| Version 3.1 update.  The file "ver3_1.ibs" contains a major reformatting of
| the document and a simplification of the wording.  It also contains some new
| technical enhancements that were unresolved when Version 3.0 was approved.
|
| Version 3.2 update.  The file "ver3_2.ibs" adds more technical advances and
| also a number of editorial changes documented in 12 BIRDs and also in
| responses to public letter ballot comments.
|
| Version 4.0 update.  This file "ver4_0.ibs" adds more technical advances and
| a few editorial changes documented in 11 BIRDs.
|
| Version 4.1 update.  This file "ver4_1.ibs adds more technical advances and
| a few editorial changes documented in 10 BIRDs.
|
|================================================================================
```

Section 3

G E N E R A L S Y N T A X R U L E S A N D G U I D E L I N E S

This section contains general syntax rules and guidelines for ASCII IBIS files:

1) The content of the files is case sensitive, except for reserved words and keywords.

2) The following words are reserved words and must not be used for any other purposes in the document:
   POWER - reserved model name, used with power supply pins,
   GND - reserved model name, used with ground pins,
   NC - reserved model name, used with no-connect pins,
   NA - used where data not available,
   CIRCUITCALL - used for circuit call references in Section 6b.

3) To facilitate portability between operating systems, file names used in the IBIS file must only have lower case characters. File names should have a basename of no more than twenty characters followed by a period ('.') , followed by a file name extension of no more than three characters. The file name and extension must use characters from the set (space, ' ', 0x20 is not included):

   a b c d e f g h i j k l m n o p q r s t u v w x y z
   0 1 2 3 4 5 6 7 8 9 _ ^ $ ~ ! # % & - { }) (@ ' `

   The file name and extension are recommended to be lower case on systems that support such names.

4) A line of the file may have at most 120 characters, followed by a line termination sequence. The line termination sequence must be one of the following two sequences: a linefeed character, or a carriage return followed by linefeed character.

5) Anything following the comment character is ignored and considered a comment on that line. The default "|" (pipe) character can be changed by the keyword [Comment Char] to any other character. The [Comment Char] keyword can be used throughout the file as desired.

6) Keywords must be enclosed in square brackets, [], and must start in column 1 of the line. No space or tab is allowed immediately after the opening bracket '[' or immediately before the closing bracket ']'. If used, only one space (' ') or underscore ('_') character separates the parts of a multi-word keyword.

7) Underscores and spaces are equivalent in keywords. Spaces are not allowed in subparameter names.

| 8) Valid scaling factors are:
| T = tera k = kilo n = nano
| G = giga m = milli p = pico
| M = mega u = micro f = femto
| When no scaling factors are specified, the appropriate base units are assumed. (These are volts, amperes, ohms, farads, henries, and seconds.) The parser looks at only one alphabetic character after a numerical entry, therefore it is enough to use only the prefixes to scale the parameters. However, for clarity, it is allowed to use full abbreviations for the units, (e.g., pF, nH, mA, mOhm). In addition, scientific notation IS allowed (e.g., 1.2345e-12).
|
| 9) The I-V data tables should use enough data points around sharply curved areas of the I-V curves to describe the curvature accurately. In linear regions there is no need to define unnecessary data points.
|
| 10) The use of tab characters is legal, but they should be avoided as much as possible. This is to eliminate possible complications that might arise in situations when tab characters are automatically converted to multiple spaces by text editing, file transferring and similar software. In cases like that, lines might become longer than 120 characters, which is illegal in IBIS files.
|
| 11) Currents are considered positive when their direction is into the component.
|
| 12) All temperatures are represented in degrees Celsius.
|
| 13) Important supplemental information is contained in the last section, "NOTES ON DATA DERIVATION METHOD", concerning how data values are derived.
|
| 14) Only ASCII characters, as defined in ANSI Standard X3.4-1986, may be used in an IBIS file. The use of characters with codes greater than hexadecimal 07E is not allowed. Also, ASCII control characters (those numerically less than hexadecimal 20) are not allowed, except for tabs or in a line termination sequence. As mentioned in item 10 above, the use of tab characters is discouraged.
|
|==========

Section 4

F I L E H E A D E R I N F O R M A T I O N

Keyword: **[IBIS Ver]**
Required: Yes
Description: Specifies the IBIS template version. This keyword informs electronic parsers of the kinds of data types that are present in the file.
Usage Rules: [IBIS Ver] must be the first keyword in any IBIS file. It is normally on the first line of the file, but can be preceded by comment lines that must begin with a "|".

[IBIS Ver]	4.1

Used for template variations

Keyword: **[Comment Char]**
Required: No
Description: Defines a new comment character to replace the default "|" (pipe) character, if desired.
Usage Rules: The new comment character to be defined must be followed by the underscore character and the letters "char". For example: "|_char" redundantly redefines the comment character to be the pipe character. The new comment character is in effect only following the [Comment Char] keyword. The following characters MAY be used:

! " # $ % & ' ( ) * , : ; < > ? @ \ ^ ` { | } ~

Other Notes: The [Comment Char] keyword can be used throughout the file, as desired.

[Comment Char]	|_char

Keyword: **[File Name]**
Required: Yes
Description: Specifies the name of the IBIS file.
Usage Rules: The file name must conform to the rules in paragraph 3 of Section 3, GENERAL SYNTAX RULES AND GUIDELINES. In addition, the file name must use the extension ".ibs", ".pkg", or or ".ebd". The file name must be the actual name of the file.

[File Name]	ver4_1.ibs

```
|=============================================================================
|     Keyword:  [File Rev]
|    Required:  Yes
| Description:  Tracks the revision level of a particular .ibs file.
| Usage Rules:  Revision level is set at the discretion of the engineer
|               defining the file.  The following guidelines are recommended:
|                   0.x     silicon and file in development
|                   1.x     pre-silicon file data from silicon model only
|                   2.x     file correlated to actual silicon measurements
|                   3.x     mature product, no more changes likely
|-----------------------------------------------------------------------------
[File Rev]      1.0                     | Used for .ibs file variations
|
|=============================================================================
|    Keywords:  [Date], [Source], [Notes], [Disclaimer], [Copyright]
|    Required:  No
| Description:  Optionally clarifies the file.
| Usage Rules:  The keyword arguments can contain blanks, and be of any
|               format.  The [Date] keyword argument is limited to a maximum
|               of 40 characters, and the month should be spelled out for
|               clarity.
|
|               Because IBIS model writers may consider the information in
|               these keywords essential to users, and sometimes legally
|               required, design automation tools should make this information
|               available.  Derivative models should include this text
|               verbatim.  Any text following the [Copyright] keyword must be
|               included in any derivative models verbatim.
|-----------------------------------------------------------------------------
[Date]          January 30, 2004          | The latest file revision date
|
[Source]        Put originator and the source of information here.  For
                example:

                From silicon level SPICE model at Intel.
                From lab measurement at IEI.
                Compiled from manufacturer's data book at Quad Design, etc.
|
[Notes]         Use this section for any special notes related to the file.
|
[Disclaimer]    This information is for modeling purposes only, and is not
                guaranteed.                     | May vary by component
|
[Copyright]     Copyright 2004, XYZ Corp., All Rights Reserved
|
|=============================================================================
```

Section 5

C O M P O N E N T D E S C R I P T I O N

Keyword: **[Component]**
Required: Yes
Description: Marks the beginning of the IBIS description of the integrated circuit named after the keyword.
Sub-Params: Si_location, Timing_location
Usage Rules: If the .ibs file contains data for more than one component, each section must begin with a new [Component] keyword. The length of the component name must not exceed 40 characters, and blank characters are allowed.

NOTE: Blank characters are not recommended due to usability issues.

Si_location and Timing_location are optional and specify where the Signal Integrity and Timing measurements are made for the component. Allowed values for either subparameter are 'Die' or 'Pin'. The default location is at the 'Pin'.

```
[Component]     7403398 MC452
Si_location     Pin    | Optional subparameters to give measurement
Timing_location Die    | location positions
```

Keyword: **[Manufacturer]**
Required: Yes
Description: Specifies the name of the component's manufacture.
Usage Rules: The length of the manufacturer's name must not exceed 40 characters (blank characters are allowed, e.g., Texas Instruments). In addition, each manufacturer must use a consistent name in all .ibs files.

```
[Manufacturer]  Intel Corp.
```

Keyword: **[Package]**
Required: Yes
Description: Defines a range of values for the default packaging resistance, inductance, and capacitance of the component pins.
Sub-Params: R_pkg, L_pkg, C_pkg
Usage Rules: The typical (typ) column must be specified. If data for the other columns are not available, they must be noted with "NA".
Other Notes: If RLC parameters are available for individual pins, they can be listed in columns 4-6 under keyword [Pin]. The values listed in the [Pin] description section override the default values defined here. Use the [Package Model] keyword for more complex package descriptions. If defined, the [Package Model] data overrides the values in the [Package] keyword.

```
|               Regardless, the data listed under the [Package] keyword must
|               still contain valid data.
|-------------------------------------------------------------------------------
[Package]
| variable      typ             min             max
R_pkg           250.0m          225.0m          275.0m
L_pkg           15.0nH          12.0nH          18.0nH
C_pkg           18.0pF          15.0pF          20.0pF
|
|===============================================================================
|     Keyword:  [Pin]
|    Required:  Yes
| Description:  Associates the component's I/O models to its various external
|               pin names and signal names.
|  Sub-Params:  signal_name, model_name, R_pin, L_pin, C_pin
| Usage Rules:  All pins on a component must be specified.  The first column
|               must contain the pin name.  The second column, signal_name,
|               gives the data book name for the signal on that pin.  The
|               third column, model_name, maps a pin to a specific I/O buffer
|               model or model selector name.  Each model_name must have a
|               corresponding model or model selector name listed in a [Model]
|               or [Model Selector] keyword below, unless it is a reserved
|               model name (POWER, GND, or NC).
|
|               The model_name column cannot be used for model or model
|               selector names that reference Series and Series_switch models.
|
|               Each line must contain either three or six columns.  A pin
|               line with three columns only associates the pin's signal and
|               model.  Six columns can be used to override the default
|               package values (specified under [Package]) FOR THAT PIN ONLY.
|               When using six columns, the headers R_pin, L_pin, and C_pin
|               must be listed.  If "NA" is in columns 4 through 6, the
|               default packaging values must be used.  The headers R_pin,
|               L_pin, and C_pin may be listed in any order.
|
|               Column length limits are:
|                   [Pin]         5 characters max
|                   model_name   20 characters max
|                   signal_name  20 characters max
|                   R_pin         9 characters max
|                   L_pin         9 characters max
|                   C_pin         9 characters max
|-------------------------------------------------------------------------------
```

```
[Pin]   signal_name     model_name      R_pin   L_pin   C_pin
|
  1     RAS0#           Buffer1         200.0m  5.0nH   2.0pF
  2     RAS1#           Buffer2         209.0m  NA      2.5pF
  3     EN1#            Input1          NA      6.3nH   NA
  4     A0              3-state
  5     D0              I/O1
  6     RD#             Input2          310.0m  3.0nH   2.0pF
  7     WR#             Input2
  8     A1              I/O2
  9     D1              I/O2
 10     GND             GND             297.0m  6.7nH   3.4pF
 11     RDY#            Input2
 12     GND             GND             270.0m  5.3nH   4.0pF
|   .
|   .
|   .
 18     Vcc3            POWER
 19     NC              NC
 20     Vcc5            POWER           226.0m  NA      1.0pF
 21     BAD1            Series_switch1     |   Illegal assignment
 22     BAD2            Series_selector1   |   Illegal assignment
|
|=============================================================================
|     Keyword:  [Package Model]
|    Required:  No
| Description:  Indicates the name of the package model to be used for the
|               component.
| Usage Rules:  The package model name is limited to 40 characters.  Spaces
|               are allowed in the name.  The name should include the company
|               name or initials to help ensure uniqueness.  The EDA tool
|               will search for a matching package model name as an argument
|               to a [Define Package Model] keyword in the current IBIS file
|               first.  If a match is not found, the EDA tool will next look
|               for a match in an external .pkg file.  If the matching package
|               model is in an external .pkg file, it must be located in the
|               same directory as the .ibs file.  The file names of .pkg files
|               must follow the rules for file names given in Section 3,
|               GENERAL SYNTAX RULES AND GUIDELINES.
| Other Notes:  Use the [Package Model] keyword within a [Component] to
|               indicate which package model should be used for that
|               component.  The specification permits .ibs files to contain
|               [Define Package Model] keywords as well.  These are described
|               in the "Package Modeling" section near the end of this
|               specification.  When package model definitions occur within a
|               .ibs file, their scope is "local", i.e., they are known only
|               within that .ibs file and no other.  In addition, within that
|               .ibs file, they override any globally defined package models
|               that have the same name.
|-----------------------------------------------------------------------------
[Package Model]     QS-SMT-cer-8-pin-pkgs
|
|=============================================================================
```

```
|=============================================================================
|    Keywords:  [Alternate Package Models], [End Alternate Package Models]
|    Required:  No
| Description:  Used to select a package model from a list of package models.
| Usage Rules:  The [Alternate Package Models] keyword can be used in addition
|               to the [Package Model] keyword.  [Alternate Package Models]
|               shall be used only for components that use the [Package Model]
|               keyword.
|
|               Each [Alternate Package Models] keyword specifies a set of
|               alternate package model names for only one component, which
|               is given by the previous [Component] keyword.  The [Alternate
|               Package Models] keyword shall not appear before the first
|               [Component] keyword in an IBIS file.  The [Alternate Package
|               Models] keyword applies only to the [Component] section in
|               which it appears, and must be followed by an [End Alternate
|               Package Models] keyword.
|
|               All alternate package model names must appear below the
|               [Alternate Package Models] keyword, and above the following
|               [End Alternate Package Models] keyword.  The package model
|               names listed under the [Alternate Package Models] must follow
|               the rules of the package model names associated with the
|               [Package Model] keyword.  The package model names correspond
|               to the names of package models defined by [Define Package
|               Model] keywords.  EDA tools may offer users a facility
|               for choosing between the default package model and any of the
|               alternate package models, when analyzing occurrences of the
|               [Component].
|
|               The package model named by [Package Model] can be optionally
|               repeated in the [Alternate Package Models] list of names.
|-----------------------------------------------------------------------------
[Alternate Package Models]
|
208-pin_plastic_PQFP_package-even_mode | Descriptive names are shown
208-pin_plastic_PQFP_package-odd_mode
208-pin_ceramic_PQFP_package-even_mode
208-pin_ceramic_PQFP_package-odd_mode
|
[End Alternate Package Models]
|
|=============================================================================
|     Keyword:  [Pin Mapping]
|    Required:  No
| Description:  Used to indicate the power and/or ground buses to which a
|               given driver, receiver or terminator is connected.
|  Sub-Params:  pulldown_ref, pullup_ref, gnd_clamp_ref, power_clamp_ref,
|               ext_ref
| Usage Rules:  The [Pin Mapping] keyword names the connections between POWER
|               and/or GND pins and buffer and/or terminator voltage supply
|               references using unique bus labels.  All buses with identical
|               labels are assumed to be connected with an ideal short.  Each
|               label must be associated with at least one pin whose
|               model_name is POWER or GND.  Bus labels must not exceed 15
|               characters.
|
```

Each line must contain either three, five or six entries. Use the reserved word NC where an entry is required but a bus connection is not made (see below).

The first column contains a pin name. Each pin name must match one of the pin names declared in the [Pin] section of the [Component].

For buffers and terminators, the remaining columns correspond to the voltage supply references for the named pin. Each [Model] supply reference is connected to a particular bus through a bus label in the corresponding column.

The second column, pulldown_ref, designates the ground bus connections for the buffer or termination associated with that pin. The bus named under pulldown_ref is associated with the [Pulldown] I-V table for non-ECL [Model]s. This is also the bus associated with the [GND Clamp] I-V table and the [Rgnd] model unless overridden by a label in the gnd_clamp_ref column.

The third column, pullup_ref, designates the power bus connection for the buffer or termination. The bus named under pullup_ref is associated with the [Pullup] table for non-ECL [Model]s (for ECL models, this bus is associated with the [Pulldown] table). This is also the bus label associated with the [POWER Clamp] I-V table and the Rpower] model unless overridden by a label in the power_clamp_ref column.

The fourth and fifth columns, gnd_clamp_ref and power_clamp_ref, contain entries, if needed, to specify additional ground bus and power bus connections for clamps. Finally, the sixth column, ext_ref, contains entries to specify external reference supply bus connections.

The usage of the columns changes for GND and POWER pins. For GND pins, the pulldown_ref column contains the name of the bus to which the pin connects; the pullup_ref column in this case must contain the reserved word NC. Similarly, for POWER (including external reference) pins, the pullup_ref column contains the name of the bus to which the pin connects; the pulldown_ref column in this case must contain the reserved word NC.

If the [Pin Mapping] keyword is present, then the bus connections for EVERY pin listed under the [Pin] keyword must be given.

If a pin has no connection, then both the pulldown_ref and pullup_ref subparameters for it will be NC.

```
|               The column length limits are:
|                      [Pin Mapping]     5 characters max
|                      pulldown_ref     15 characters max
|                      pullup_ref       15 characters max
|                      gnd_clamp_ref    15 characters max
|                      power_clamp_ref  15 characters max
|                      ext_ref          15 characters max
|
|               For compatibility with models developed under previous IBIS
|               versions, [Pin Mapping] lines which contain ext_ref column
|               entries must also explicitly include entries for the
|               pulldown_ref, pullup_ref, gnd_clamp_ref and power_clamp_ref
|               columns.  These entries can be NC, as explained above.
|
|               When six columns of data are specified, the headings
|               gnd_clamp_ref, power_clamp_ref and ext_ref must be used on
|               the line containing the [Pin Mapping] keyword.  Otherwise,
|               these headings can be omitted.
|
|-------------------------------------------------------------------------------
[Pin Mapping] pulldown_ref pullup_ref gnd_clamp_ref power_clamp_ref ext_ref
|
1               GNDBUS1    PWRBUS1   | Signal pins and their associated
2               GNDBUS2    PWRBUS2   | ground, power and external
|                                    | reference connections
3               GNDBUS1    PWRBUS1     GNDCLMP        PWRCLAMP
4               GNDBUS2    PWRBUS2     GNDCLMP        PWRCLAMP
5               GNDBUS2    PWRBUS2     NC             PWRCLAMP REFBUS1
6               GNDBUS2    PWRBUS2     GNDCLMP        NC
7               GNDBUS2    PWRBUS2     GNDCLMP        NC       REFBUS2
|                                   | Some possible clamping
|                                   | connections are shown above
|  .                                | for illustration purposes
|  .
11              GNDBUS1    NC        | One set of ground connections.
12              GNDBUS1    NC        | NC indicates no connection to
13              GNDBUS1    NC        | power bus.
|  .
21              GNDBUS2    NC        | Second set of ground connections
22              GNDBUS2    NC
23              GNDBUS2    NC
|  .
31              NC         PWRBUS1   | One set of power connections.
32              NC         PWRBUS1   | NC indicates no connection to
33              NC         PWRBUS1   | ground bus.
|  .
41              NC         PWRBUS2   | Second set of power connections
42              NC         PWRBUS2
43              NC         PWRBUS2
|  .
51              GNDCLMP    NC        | Additional power connections
52              NC         PWRCLMP   | for clamps
|
|  .
71              NC         REFBUS1   | External reference connections
72              NC         REFBUS2
|
```

```
| The following [Pin] list corresponds to the [Pin Mapping] shown above.
|
[Pin] signal_name model_name R_pin L_pin C_pin
|
1     OUT1         output_buffer1      | Output buffers
2     OUT2         output_buffer2      |
3     IO3          io_buffer1          | Input/output buffers
4     IO4          io_buffer2          |
5     SPECIAL1     ref_buffer1         | Buffers with POWER CLAMP but no
6     SPECIAL2     io_buffer_term1     | GND CLAMP I-V tables; two use
7     SPECIAL3     ref_buffer2         | external reference voltages
11    VSS1          GND
12    VSS1          GND
13    VSS1          GND
21    VSS2          GND
22    VSS2          GND
23    VSS2          GND
31    VCC1          POWER
32    VCC1          POWER
33    VCC1          POWER
41    VCC2          POWER
42    VCC2          POWER
43    VCC2          POWER
51    VSSCLAMP      GND               | Power connections for clamps
52    VCCCLAMP      POWER             |
71    V_EXTREF1     POWER             | External reference voltage pins
72    V_EXTREF2     POWER             |
|
|=============================================================================
|     Keyword:  [Diff Pin]
|    Required:  No
| Description:  Associates differential pins, their differential threshold
|               voltages, and differential timing delays.
|  Sub-Params:  inv_pin, vdiff, tdelay_typ, tdelay_min, tdelay_max
| Usage Rules:  Enter only differential pin pairs.  The first column, [Diff
|               Pin], contains a non-inverting pin name.  The second column,
|               inv_pin, contains the corresponding inverting pin name for
|               I/O output.  Each pin name must match the pin names declared
|               previously in the [Pin] section of the IBIS file.  The third
|               column, vdiff, contains the specified output and differential
|               threshold voltage between pins if the pins are Input or I/O
|               model types.  For output only differential pins, the vdiff
|               entry is 0 V.  The fourth, fifth, and sixth columns,
|               tdelay_typ, tdelay_min, and tdelay_max, contain launch delays
|               of the non-inverting pins relative to the inverting pins. The
|               values can be of either polarity.
|
|               If a pin is a differential input pin, the differential input
|               threshold (vdiff) overrides and supersedes the need for Vinh
|               and Vinl.
|
|               If vdiff is not defined for a pin that is defined as requiring
|               a Vinh by its [Model] type, vdiff is set to the default value
|               of 200 mV.
|
```

| Other Notes: The output pin polarity specification in the table overrides
| the [Model] Polarity specification such that the pin in the
| [Diff Pin] column is Non-Inverting and the pin in the inv_pin
| column is Inverting. This convention enables one [Model] to
| be used for both pins.
|
| The column length limits are:
| [Diff Pin] 5 characters max
| inv_pin 5 characters max
| vdiff 9 characters max
| tdelay_typ 9 characters max
| tdelay_min 9 characters max
| tdelay_max 9 characters max
|
| Each line must contain either four or six columns. If "NA" is
| entered in the vdiff, tdelay_typ, or tdelay_min columns, its
| entry is interpreted as 0 V or 0 ns. If "NA" appears in the
| tdelay_max column, its value is interpreted as the tdelay_typ
| value. When using six columns, the headers tdelay_min and
| tdelay_max must be listed. Entries for the tdelay_min column
| are based on minimum magnitudes; and tdelay_max column,
| maximum magnitudes. One entry of vdiff, regardless of its
| polarity, is used for difference magnitudes.
|---

[Diff Pin]	inv_pin	vdiff	tdelay_typ	tdelay_min	tdelay_max	
3	4	150mV	-1ns	0ns	-2ns	Input or I/O pair
7	8	0V	1ns	NA	NA	Output* pin pair
9	10	NA	NA	NA	NA	Output* pin pair
16	15	200mV	1ns			Input or I/O pin pair
20	19	0V	NA			Output* pin pair, tdelay = 0
22	21	NA	NA			Output*, tdelay = 0

| * Could be Input or I/O with vdiff = 0
|
|===
| **Keyword: [Series Pin Mapping]**
| Required: No
| Description: Used to associate two pins joined by a series model.
| Sub-Params: pin_2, model_name, function_table_group
| Usage Rules: Enter only series pin pairs. The first column, [Series Pin
| Mapping], contains the series pin for which input impedances
| are measured. The second column, pin_2, contains the other
| connection of the series model. Each pin must match the pin
| names declared previously in the [Pin] section of the IBIS
| file. The third column, model_name, associates the Series or
| Series_switch model for the pair of pins in the first two
| columns. The fourth column, function_table_group, contains
| an alphanumeric designator string to associate those sets of
| Series_switch pins that are switched together.
|
| Each line must contain either three or four columns. When
| using four columns, the header function_table_group must be
| listed.
|
| One possible application is to model crossbar switches where
| the straight through On paths are indicated by one designator
| and the cross over On paths are indicated by another

| designator. If the model referenced is a Series model, then
| the function_table_group entry is omitted.
|
| Note that, if the function_table_group entry is used, the
| [Series Switch Groups] keyword must be present and contain
| switching combination definitions corresponding to the
| function group entries.
|
| The column length limits are:
| [Series Pin Mapping] 5 characters max
| pin_2 5 characters max
| model_name 20 characters max
| function_table_group 20 characters max
|
| Other Notes: If the model_name is for a non-symmetrical series model,
| then the order of the pins is important. The [Series Pin
| Mapping] and pin_2 entries must be in the columns that
| correspond with Pin 1 and Pin 2 of the referenced model.
|
| This mapping covers only the series paths between pins. The
| package parasitics and any other elements such as additional
| capacitance or clamping circuitry are defined by the
| model_name that is referenced in the [Pin] keyword. The
| model_names under the [Pin] keyword that are also referenced
| by the [Series Pin Mapping] keyword may include any legal
| model or reserved model except for Series and Series_switch
| models. Normally the pins will reference a [Model] whose
| Model_type is 'Terminator'. For example, a Series_switch
| model may contain Terminator models on EACH of the pins to
| describe both the capacitance on each pin and some clamping
| circuitry that may exist on each pin. In a similar manner,
| Input, I/O or Output models may exist on each pin of a Series
| model that is serving as a differential termination.
|---

[Series Pin Mapping]	pin_2	model_name	function_table_group
2	3	CBTSeries	1	Four independent groups
5	6	CBTSeries	2	
9	8	CBTSeries	3	
12	11	CBTSeries	4	
22	23	CBTSeries	5	Straight through path
25	26	CBTSeries	5	
22	26	CBTSeries	6	Cross over path
25	23	CBTSeries	6	
32	33	Fixed_series		No group needed

|===
| **Keyword: [Series Switch Groups]**
| Required: Yes, if function_table_group column data is present under
| [Series Pin Mapping]
| Description: Used to define allowable switching combinations of series
| switches described using the names of the groups in the
| [Series Pin Mapping] keyword function_table_group column.
| Sub-Params: On, Off

```
| Usage Rules:  Each state line contains an allowable configuration.  A
|               typical state line will start with 'On' followed by all of the
|               on-state group names or an 'Off' followed by all of the
|               off-state group names.  Only one of 'On' or 'Off' is required
|               since the undefined states are presumed to be opposite of the
|               explicitly defined states.  The state line is terminated with
|               the slash '/', even if it extends over several lines to fit
|               within the 120 character column width restriction.
|
|               The group names in the function_table_group are used to
|               associate switches whose switching action is synchronized by
|               a common control function.  The first line defines the assumed
|               (default) state of the set of series switches.  Other sets of
|               states are listed and can be selected through a user interface
|               or through automatic control.
|-------------------------------------------------------------------------------
[Series Switch Groups]
| Function Group States
On 1 2 3 4 /           | Default setting is all switched On
|
Off 1 2 3 4 /          | All Off setting
On 1 /                 | Other possible combinations below
On 2 /
On 3 /
On 4 /
On 1 2 /
On 1 3 /
On 1 4 /
On 2 3 /
On 2 4 /
On 3 4 /
On 1 2 3 /
On 1 2 4 /
On 1 3 4 /
On 2 3 4 /
| Off 4 /              | The last four lines above could have been replaced
| Off 3 /              | with these four lines with the same meaning.
| Off 2 /
| Off 1 /
|
On 5 /                 | Crossbar switch straight through connection
On 6 /                 | Crossbar cross over connection
Off 5 6 /              | Crossbar open switches
|
|===============================================================================
|     Keyword:  [Model Selector]
|    Required:  No
| Description:  Used to pick a [Model] from a list of [Model]s for a pin which
|               uses a programmable buffer.
| Usage Rules:  A programmable buffer must have an individual [Model] section
|               for each one of its modes used in the .ibs file.  The names of
|               these [Model]s must be unique and can be listed under the
|               [Model Selector] keyword and/or pin list.  The name of the
|               [Model Selector] keyword must match the corresponding model
|               name listed under the [Pin] or [Series Pin Mapping] keyword
|               and must not contain more than 20 characters.  A .ibs file
|               must contain enough [Model Selector] keywords to cover all of
```

| the model selector names specified under the [Pin] and [Series Pin Mapping] keywords.
|
| The section under the [Model Selector] keyword must have two fields. The two fields must be separated by at least one white space. The first field lists the [Model] name (up to 20 characters long). The second field contains a short description of the [Model] shown in the first field. The contents and format of this description is not standardized, however it shall be limited in length so that none of the descriptions exceed the 120-character length of the line that it started on. The purpose of the descriptions is to aid the user of the EDA tool in making intelligent buffer mode selections and it can be used by the EDA tool in a user interface dialog box as the basis of an interactive buffer selection mechanism.
|
| The first entry under the [Model Selector] keyword shall be considered the default by the EDA tool for all those pins which call this [Model Selector].
|
| The operation of this selection mechanism implies that a group of pins which use the same programmable buffer (i.e., model selector name) will be switched together from one [Model] to another. Therefore, if two groups of pins, for example an address bus and a data bus, use the same programmable buffer, and the user must have the capability to configure them independently, one can use two [Model Selector] keywords with unique names and the same list of [Model] keywords; however, the usage of the [Model Selector] is not limited to these examples. Many other combinations are possible.
|---

```
[Pin]   signal_name     model_name      R_pin   L_pin   C_pin
|
  1     RAS0#           Progbuffer1     200.0m  5.0nH   2.0pF
  2     EN1#            Input1          NA      6.3nH   NA
  3     A0              3-state
  4     D0              Progbuffer2
  5     D1              Progbuffer2     320.0m  3.1nH   2.2pF
  6     D2              Progbuffer2
  7     RD#             Input2          310.0m  3.0nH   2.0pF
|  .
|  .
|  .
  18     Vcc3            POWER
|
[Model Selector]        Progbuffer1
|
OUT_2       2 mA buffer without slew rate control
OUT_4       4 mA buffer without slew rate control
OUT_6       6 mA buffer without slew rate control
OUT_4S      4 mA buffer with slew rate control
OUT_6S      6 mA buffer with slew rate control
|
[Model Selector]        Progbuffer2
|
OUT_2       2 mA buffer without slew rate control
OUT_6       6 mA buffer without slew rate control
OUT_6S      6 mA buffer with slew rate control
OUT_8S      8 mA buffer with slew rate control
OUT_10S    10 mA buffer with slew rate control
|
|=============================================================================
```

Section 6

M O D E L S T A T E M E N T

Keyword: **[Model]**
Required: Yes
Description: Used to define a model, and its attributes.
Sub-Params: Model_type, Polarity, Enable, Vinl, Vinh, C_comp, C_comp_pullup, C_comp_pulldown, C_comp_power_clamp, C_comp_gnd_clamp, Vmeas, Cref, Rref, Vref
Usage Rules: Each model type must begin with the keyword [Model]. The model name must match the one that is listed under a [Pin], [Model Selector] or [Series Pin Mapping] keyword and must not contain more than 20 characters. A .ibs file must contain enough [Model] keywords to cover all of the model names specified under the [Pin], [Model Selector] and [Series Pin Mapping] keywords, except for those model names that use reserved words (POWER, GND and NC).

Model_type must be one of the following:

Input, Output, I/O, 3-state, Open_drain, I/O_open_drain, Open_sink, I/O_open_sink, Open_source, I/O_open_source, Input_ECL, Output_ECL, I/O_ECL, 3-state_ECL, Terminator, Series, and Series_switch.

For true differential models documented under Section 6b, Model_type must be one of the following:

Input_diff, Output_diff, I/O_diff, and 3-state_diff

Special usage rules apply to the following. Some definitions are included for clarification:

Input I/O I/O_open_drain I/O_open_sink I/O_open_source	These model types must have Vinl and Vinh defined. If they are not defined, the parser issues a warning and the default values of Vinl = 0.8 V and Vinh = 2.0 V are assumed.
Input_ECL I/O_ECL	These model types must have Vinl and Vinh defined. If they are not defined, the parser issues a warning and the default values of Vinl = -1.475 V and Vinh = -1.165 V are assumed.
Terminator	This model type is an input-only model that can have analog loading effects on the circuit being simulated but has no digital logic thresholds. Examples of terminators are: capacitors, termination diodes, and pullup resistors.

	Output	This model type indicates that an output always sources and/or sinks current and cannot be disabled.
	3-state	This model type indicates that an output can be disabled, i.e., put into a high impedance state.
	Open_sink Open_drain	These model types indicate that the output has an OPEN side (do not use the [Pullup] keyword, or if it must be used, set I = 0 mA for all voltages specified) and the output SINKS current. Open_drain model type is retained for backward compatibility.
	Open_source	This model type indicates that the output has an OPEN side (do not use the [Pulldown] keyword, or if it must be used, set I = 0 mA for all voltages specified) and the output SOURCES current.
	Input_ECL Output_ECL I/O_ECL 3-state_ECL	These model types specify that the model represents an ECL type logic that follows different conventions for the [Pulldown] keyword.
	Series	This model type is for series models that can be described by [R Series], [L Series], [Rl Series], [C Series], [Lc Series], [Rc Series], [Series Current] and [Series MOSFET] keywords.
	Series_switch	This model type is for series switch models that can be described by [On], [Off], [R Series], [L Series], [Rl Series], [C Series], [Lc Series], [Rc Series], [Series Current] and [Series MOSFET] keywords.
	Input_diff Output_diff I/O_diff 3-state_diff	These model types specify that the model defines a true differential model available directly through the [External Model] keyword documented in Section 6b.

The Model_type subparameter is required.

The C_comp subparameter is required only when C_comp_pullup, C_comp_pulldown, C_comp_power_clamp, and C_comp_gnd_clamp are not present. If the C_comp subparameter is not present, at least one of the C_comp_pullup, C_comp_pulldown, C_comp_power_clamp, or C_comp_gnd_clamp subparameters is required. It is not illegal to include the C_comp subparameter together with one or more of the remaining C_comp_* subparameters, but in that case the simulator will have to make a decision whether to use C_comp or the C_comp_pullup, C_comp_pulldown, C_comp_power_clamp, and

C_comp_gnd_clamp subparameters. Under no circumstances should the simulator use the value of C_comp simultaneously with the values of the other C_comp_* subparameters.

C_comp_pullup, C_comp_pulldown, C_comp_power_clamp, and C_comp_gnd_clamp are intended to represent the parasitic capacitances of those structures who's I-V characteristics are described by the [Pullup], [Pulldown], [POWER Clamp] and [GND Clamp] I-V tables. For this reason, the simulator should generate a circuit netlist so that, if defined, each of the C_comp_* capacitors are connected in parallel with their corresponding I-V tables, whether or not the I-V table exists. That is, the C_comp_* capacitors are positioned between the signal pad and the nodes defined by the [Pullup Reference], [Pulldown Reference], [POWER Clamp Reference] and [GND Clamp Reference] keywords, or the [Voltage Range] keyword and GND.

The C_comp and C_comp_* subparameters define die capacitance. These values should not include the capacitance of the package. C_comp and C_comp_* are allowed to use "NA" for the min and max values only.

The Polarity, Enable, Vinl, Vinh, Vmeas, Cref, Rref, and Vref subparameters are optional.

Also, optional Rref_diff and Cref_diff subparameters discussed further in Section 6b support the true differential buffer timing test loads. They are used only when the [Diff Pin] keyword connects two models, and each buffer references the same model. The Rref_diff and Cref_diff subparameters can be used with the Rref, Cref, and Vref subparameters for a combined differential and signal-ended timing test load. Single-ended test loads are permitted for differential applications.

The Rref_diff and Cref_diff are recognized only when the [Diff Pin] keyword connects the models. This applies for the true differential buffers in Section 6b and also for differential buffers using identical single-ended models.

The Polarity subparameter can be defined as either Non-Inverting or Inverting, and the Enable subparameter can be defined as either Active-High or Active-Low.

The Cref and Rref subparameters correspond to the test load that the semiconductor vendor uses when specifying the propagation delay and/or output switching time of the model. The Vmeas subparameter is the reference voltage level that the semiconductor vendor uses for the model. Include Cref, Rref, Vref, and Vmeas information to facilitate board-level timing simulation. The assumed connections for Cref, Rref, and Vref are shown in the following diagram:

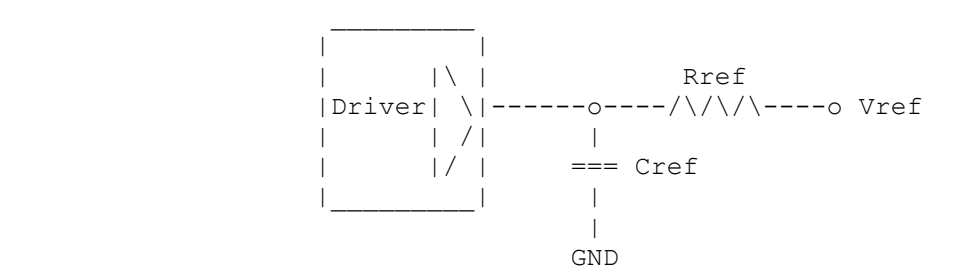

A single-ended or true differential buffer can have Rref_diff and Cref_diff.:

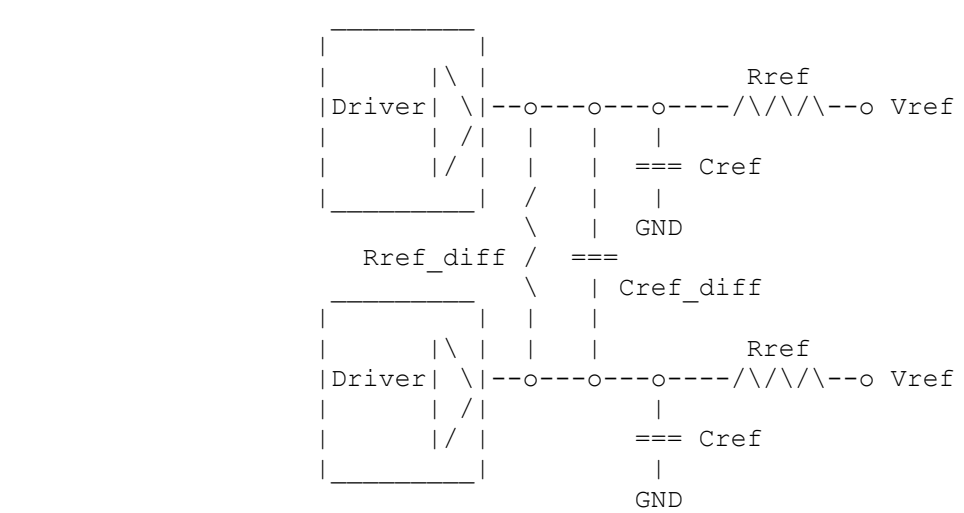

Other Notes: A complete [Model] description normally contains the following keywords: [Voltage Range], [Pullup], [Pulldown], [GND Clamp], [POWER Clamp], and [Ramp]. A Terminator model uses one or more of the [Rgnd], [Rpower], [Rac], and [Cac] keywords. However, some models may have only a subset of these keywords. For example, an input structure normally only needs the [Voltage Range], [GND Clamp], and possibly the [POWER Clamp] keywords. If one or more of [Rgnd], [Rpower], [Rac], and [Cac] keywords are used, then the Model_type must be Terminator.

```
| Signals       CLK1, CLK2,...         | Optional signal list, if desired
[Model]         Clockbuffer
Model_type      I/O
Polarity        Non-Inverting
Enable          Active-High
Vinl = 0.8V                            | Input logic "low" DC voltage, if any
Vinh = 2.0V                            | Input logic "high" DC voltage, if any
Vmeas = 1.5V              | Reference voltage for timing measurements
Cref = 50pF               | Timing specification test load capacitance value
Rref = 500                | Timing specification test load resistance value
Vref = 0                  | Timing specification test load voltage
| variable         typ             min             max
C_comp             7.0pF           5.0pF           9.0pF
|
C_comp_pullup      3.0pF           2.5pF           3.5pF | These four can be
C_comp_pulldown    2.0pF           1.5pF           2.5pF | used instead of
C_comp_power_clamp 1.0pF           0.5pF           1.5pF | C_comp
C_comp_gnd_clamp   1.0pF           0.5pF           1.5pF
|
| For a single-ended or true differential buffer (in Section 6b)
|
[Model]         External_Model_Diff
Model_type      I/O_diff               | Requires [External Model]
Polarity        Non-Inverting
Enable          Active-High
| The [Diff Pin] vdiff value overrides the thresholds below
Vinl = 0.8V                            | Input logic "low" DC voltage, if any
Vinh = 2.0V                            | Input logic "high" DC voltage, if any
|                         | The true differential measurement point is at
|                         | the crossover voltage
|                         | The Vmeas value is overridden
Vmeas = 1.5V              | Reference voltage for timing measurements
|                         | Single-ended timing test load is still permitted
Cref = 5pF                | Timing specification test load capacitance value
Rref = 500                | Timing specification test load resistance value
Vref = 0                  | Timing specification test load voltage
|                         | These new subparameters are permitted for
|                         | single-ended differential operation based on the
|                         | [Diff Pin] keyword
Rref_diff = 100           | Timing specification differential resistance value
Cref_diff = 5pF           | Timing specification differential capacitance value
|
|=============================================================================
|     Keyword:  [Model Spec]
|    Required:  No
|  Sub-Params:  Vinh, Vinl, Vinh+, Vinh-, Vinl+, Vinl-, S_overshoot_high,
|               S_overshoot_low, D_overshoot_high, D_overshoot_low,
|               D_overshoot_time, Pulse_high, Pulse_low, Pulse_time, Vmeas,
|               Vref, Cref, Rref, Cref_rising, Cref_falling, Rref_rising,
|               Rref_falling, Vref_rising, Vref_falling, Vmeas_rising,
|               Vmeas_falling, Rref_diff, Cref_diff
| Description:  The [Model Spec] keyword defines four columns under which
|               specification subparameters are defined.
|
```

| The following subparameters are defined:

Vinh	Input voltage threshold high
Vinl	Input voltage threshold low
Vinh+	Hysteresis threshold high max Vt+
Vinh-	Hysteresis threshold high min Vt+
Vinl+	Hysteresis threshold low max Vt-
Vinl-	Hysteresis threshold low min Vt-
S_overshoot_high	Static overshoot high voltage
S_overshoot_low	Static overshoot low voltage
D_overshoot_high	Dynamic overshoot high voltage
D_overshoot_low	Dynamic overshoot low voltage
D_overshoot_time	Dynamic overshoot time
Pulse_high	Pulse immunity high voltage
Pulse_low	Pulse immunity low voltage
Pulse_time	Pulse immunity time
Vmeas	Measurement voltage for timing measurements
Vref	Timing specification test load voltage
Cref	Timing specification capacitive load
Rref	Timing specification resistance load
Cref_rising	Timing specification capacitive load for rising edges
Cref_falling	Timing specification capacitive load for falling edges
Rref_rising	Timing specification resistance load for rising edges
Rref_falling	Timing specification resistance load for falling edges
Vref_rising	Timing specification test load voltage for rising edges
Vref_falling	Timing specification test load voltage for falling edges
Vmeas_rising	Measurement voltage for rising edge timing measurements
Vmeas_falling	Measurement voltage for falling edge timing measurements
Rref_diff	Timing specification differential resistance load
Cref_diff	Timing specification differential capacitive load

| Usage Rules: [Model Spec] must follow all other subparameters under the [Model] keyword.

| For each subparameter contained in the first column, the remaining three hold its typical, minimum and maximum values. The entries of typical, minimum and maximum must be placed on a single line and must be separated by at least one white space. All four columns are required under the [Model Spec] keyword. However, data is required only in the typical column. If minimum and/or maximum values are not available, the reserved word "NA" must be used indicating the typical value by default.

| The minimum and maximum values are used for specifications subparameter values that may track the min and max operation conditions of the [Model]. Usually it is related to the Voltage Range settings.

Unless noted below, no subparameter requires having present any other subparameter.

Vinh, Vinl rules:

The threshold subparameter lines provide additional min and max column values, if needed. The typ column values are still required and would be expected to override the Vinh and Vinl subparameter values specified elsewhere. Note: the syntax rule that require inserting Vinh and Vinl under models remains unchanged even if the values are defined under the [Model Spec] keyword.

Vinh+, Vinh-, Vinl+, Vinl- rules:

The four hysteresis subparameters (used for Schmitt trigger inputs for defining two thresholds for the rising edges and two thresholds for falling edges) must all be defined before independent input thresholds for rising and falling edges of the hysteresis threshold rules become effective. Otherwise the standard threshold subparameters remain in effect. The hysteresis thresholds shall be at the Vinh+ and Vinh- values for a low-to-high transition, and at the Vinl+ and Vinl- values for a high-to-low transition.

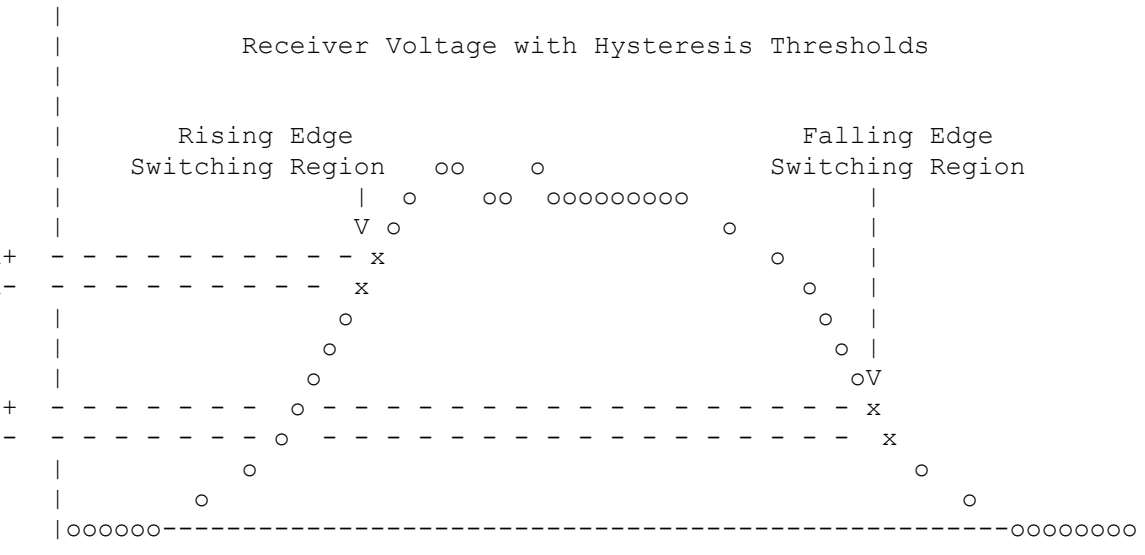

S_overshoot_high, S_overshoot_low rules:

The static overshoot subparameters provide the DC voltage values for which the model is no longer guaranteed to function correctly. Typically these are voltages that would cause the physical component to be destroyed.

D_overshoot_high, D_overshoot_low, D_overshoot_time rules:

The dynamic overshoot values provide a time window during which the overshoot may exceed the static overshoot limits but be below the dynamic overshoot limits. D_overshoot_time

| is required for dynamic overshoot testing. In addition, if
| D_overshoot_high is specified, then S_overshoot_high is
| necessary for testing beyond the static limit. Similarly, if
| D_overshoot_low is specified, then S_overshoot_low is
| necessary for testing beyond the static limit.
|

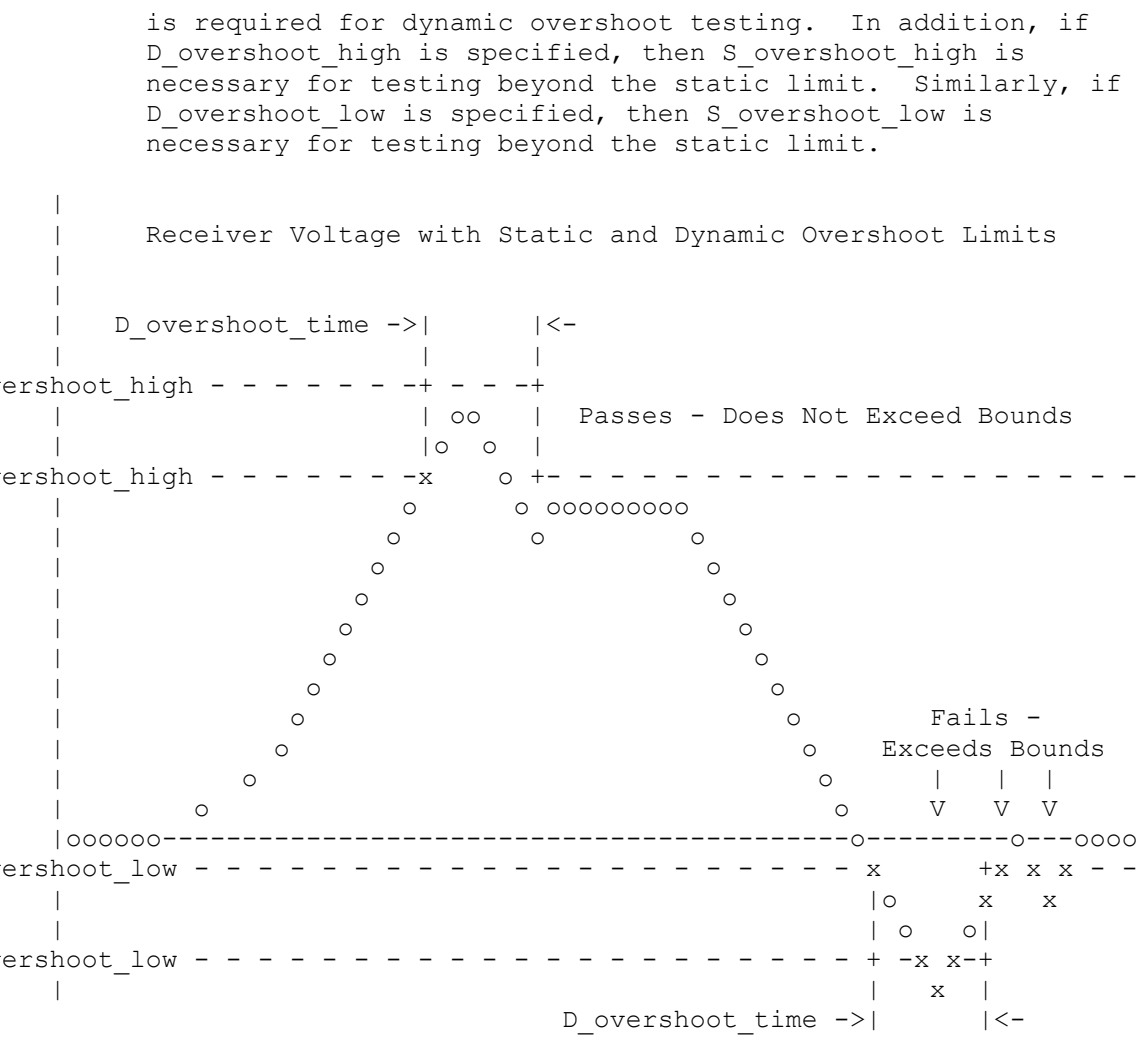

| Pulse_high, Pulse_low, Pulse_time rules:
|
| The pulse immunity values provide a time window during which
| a rising pulse may exceed the nearest threshold value but
| be below the pulse voltage value and still not cause the
| input to switch. Pulse_time is required for pulse immunity
| testing. A rising response is tested only if Pulse_high is
| specified. Similarly, a falling response is tested only if
| Pulse_low is specified. The rising response may exceed the
| Vinl value, but remain below the Pulse_high value.
|
| Similarly, the falling response may drop below the Vinh value,
| but remain above the Pulse_low value. In either case the
| input is regarded as immune to switching if the responses
| are within these extended windows. If the hysteresis
| thresholds are defined, then the rising response shall use
| Vinh- as the reference voltage, and the falling response shall
| use Vinl+ as the reference voltage.
|

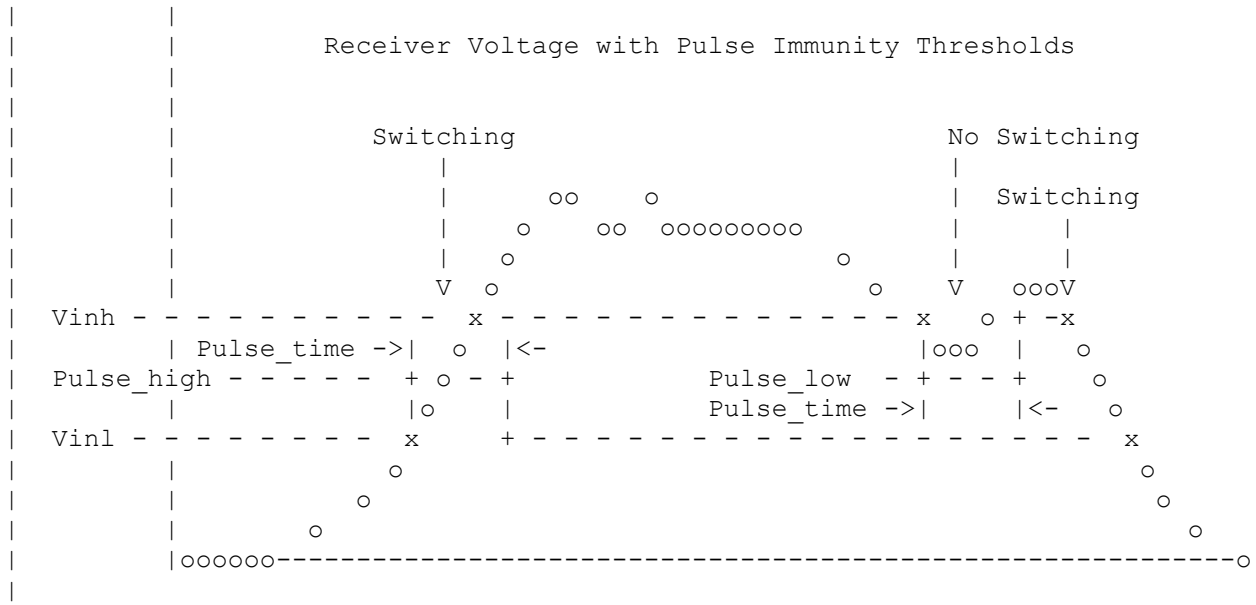

Vmeas, Vref, Cref, Rref rules:

The Vmeas, Vref, Cref and Rref values under the [Model Spec] keyword override their respective values entered elsewhere. Note that a Vmeas, Vref, Cref or Rref subparameters may not be used if its edge specific version (*_rising or *_falling) is used.

Cref_rising, Cref_falling, Rref_rising, Rref_falling, Vref_rising, Vref_falling, Vmeas_rising, Vmeas_falling rules:

Use these subparameters when specifying separate timing test loads and voltages for rising and falling edges. If one 'rising' or 'falling' subparameter is used, then the corresponding 'rising' or 'falling' subparameter must be present. The values listed in these subparameters override any corresponding Cref, Vref, Rref or Vmeas values entered elsewhere.

Rref_diff, Cref_diff rules:

The Rref_diff and Creff_diff values under the [Model Spec] keyword override their respective values entered elsewhere. These subparameters are used only when the model is referenced by the [Diff Pin] keyword. These follow the same rules as the corresponding subparameters documented under the [Model] keyword. See Section 6b for more discussion on true and single-ended differential operation.

```
[Model Spec]
|   Subparameter          typ        min        max
|
| Thresholds
|
Vinh                      3.5        3.15       3.85    | 70% of Vcc
Vinl                      1.5        1.35       1.65    | 30% of Vcc
|
| Vinh                    3.835       3.335     4.335   | Offset from Vcc
| Vinl                    3.525       3.025     4.025   | for PECL
|
| Hysteresis
|
Vinh+                     2.0        NA         NA      | Overrides the
Vinh-                     1.6        NA         NA      | thresholds
Vinl+                     1.1        NA         NA
Vinl-                     0.6        NA         NA      | All 4 are required
|
| Overshoot
|
S_overshoot_high          5.5        5.0        6.0     | Static overshoot
S_overshoot_low          -0.5        NA         NA
D_overshoot_high          6.0        5.5        6.5     | Dynamic overshoot
D_overshoot_low          -1.0       -1.0       -1.0     | requires
|                                                       | D_overshoot_time
D_overshoot_time          20n        20n        20n     | & static overshoot
|
| Pulse Immunity
|
Pulse_high                3V         NA         NA      | Pulse immunity
Pulse_low                 0          NA         NA      | requires
Pulse_time                3n         NA         NA      | Pulse_time
|
| Timing Thresholds
|
Vmeas                     3.68       3.18       4.68    | A 5 volt PECL
|                                                       | example
|
| Timing test load voltage reference example
|
Vref                      1.25       1.15       1.35    | An SSTL-2 example
|
|
| Rising and falling timing test load example (values from PCI-X
| specification)
|
Cref_falling              10p        10p         10p
Cref_rising               10p        10p         10p
Rref_rising               25         500         25  | typ value not specified
Rref_falling              25         500         25  | typ value not specified
Vref_rising               0          1.5         0
Vref_falling              3.3        1.5         3.6
Vmeas_rising              0.941      0.885       1.026 | vmeas = 0.285(vcc)
Vmeas_falling             2.0295     1.845       2.214 | vmeas = 0.615(vcc)
|
```

```
| Differential timing test load for true or single-ended differential model
|
Rref_diff                 100        90         110
Cref_diff                 5pF        NA         NA
|
|=============================================================================
|     Keyword:  [Receiver Thresholds]
|    Required:  No
|  Sub-Params:  Vth, Vth_min, Vth_max, Vinh_ac, Vinh_dc, Vinl_ac, Vinl_dc,
|               Threshold_sensitivity, Reference_supply, Vcross_low,
|               Vcross_high, Vdiff_ac, Vdiff_dc, Tslew_ac, Tdiffslew_ac
| Description:   The [Receiver Thresholds] keyword defines both a set of
|               receiver input thresholds as well as their sensitivity to
|               variations in a referenced supply.  The subparameters are
|               defined as follows:
|
|               Vth, Vth_min and Vth_max are the ideal input threshold
|               voltages at which the output of a digital logic receiver
|               changes state.  Vth is the nominal input threshold voltage
|               under the voltage, temperature and process conditions that
|               define 'typ'.  Vth_min is the minimum input threshold
|               voltage at 'typ' conditions while Vth_max is the maximum
|               input threshold voltage at 'typ' conditions.
|
|               Vinh_ac is the voltage that a low-to-high going input
|               waveform must reach in order to guarantee that the
|               receiver's output has changed state.  In other words,
|               reaching Vinh_ac is sufficient to guarantee a receiver
|               state change. Vinh_ac is expressed as an offset from Vth.
|
|               Vinh_dc is the voltage that an input waveform must remain
|               above (more positive than) in order to guarantee that a
|               receiver output will NOT change state.  Vinh_dc is
|               expressed as an offset from Vth.
|
|               Vinl_ac is the voltage that a high-to-low going input
|               waveform must reach in order to guarantee that the
|               receiver's output has changed state.  In other words,
|               reaching Vinl_ac is sufficient to guarantee a receiver
|               state change.  Vinl_ac is expressed as an offset from Vth.
|
|               Vinl_dc is the voltage that an input waveform must remain
|               below (more negative than) in order to guarantee that a
|               receiver's output will NOT change state.  Vinl_dc is
|               expressed as an offset from Vth.
|
|               Threshold_sensitivity is a unit less number that specifies
|               how Vth varies with respect to the supply voltage defined
|               by the Reference_supply subparameter. Threshold_sensitivity
|               is defined as:
|
|                                          change in input threshold voltage
|               Threshold_sensitivity = ------------------------------------
|                                          change in referenced supply voltage
|
|               Threshold_sensitivity must be entered as a whole number or
|               decimal, not as a fraction.
```

| Reference_supply indicates which supply voltage Vth tracks;
| i.e., it indicates which supply voltage change causes a
| change in input threshold. The legal arguments to this
| subparameter are as follows:
| Power_clamp_ref The supply voltage defined by the
| [POWER Clamp Reference] keyword
| Gnd_clamp_ref The supply voltage defined by the
| [GND Clamp Reference] keyword
| Pullup_ref The supply voltage defined by the
| [Pullup reference] keyword
| Pulldown_ref The supply voltage defined by the
| [Pulldown reference] keyword
| Ext_ref The supply voltage defined by the
| [External Reference] keyword
|
| Tslew_ac and Tdiffslew_ac measures the absolute difference
| in time between the point at which an input waveform
| crosses Vinl_ac and the point it crosses Vinh_ac. The
| purpose of this parameter is to document the maximum amount
| of time an input signal may take to transition between
| Vinh_ac and Vinl_ac and still allow the device to meet its
| input setup and hold specifications. Tslew_ac is the
| parameter used for single ended receivers while
| Tdiffslew_ac must be used for receivers with differential
| inputs.
|
| Vcross_low is the least positive voltage at which a
| differential receivers' input signals may cross while
| switching and still allow the receiver to meet its timing
| and functional specifications. Vcross_low is specified
| with respect to 0 V.
|
| Vcross_high is the most positive voltage at which a
| differential receivers' input signals may cross while
| switching and still allow the receiver to meet its timing
| and functional specifications. Vcross_high is specified
| with respect to 0 V.
|
| Vdiff_dc is the minimum voltage difference between the
| inputs of a differential receiver that guarantees the
| receiver will not change state.
|
| Vdiff_ac is the minimum voltage difference between the
| inputs of a differential receiver that guarantees the
| receiver will change state.
|
| Usage Rules: The [Receiver Thresholds] keyword is valid if the model type
| includes any reference to input or I/O. For single ended
| receivers the Vinh_ac, Vinh_dc, Vinl_ac, Vinh_dc, Vth and
| Tslew_ac subparameters are required and override the Vinh,
| Vinl, Vinh+/- and Vinl+/- subparameters declared under the
| [Model] or [Model Spec] keywords. For single ended receivers
| the Vth_min, Vth_max, Threshold_sensitivity and
| Reference_supply subparameters are optional. However, if
| the Threshold_sensitivity subparameter is present then the
| Reference_supply subparameter must also be present.
|

```
|               For differential receivers (i.e., the [Receiver Thresholds]
|               keyword is part of a [Model] statement that describes a pin
|               listed in the [Diff Pin] keyword) then the Vcross_low,
|               Vcross_high, Vdiff_ac, Vdiff_dc and Tdiffslew_ac subparameters
|               are required. The rest of the subparameters are not
|               applicable.  The Vdiff_ac and Vdiff_dc values override the
|               value of the vdiff subparameter specified by the [Diff Pin]
|               keyword.  Note that Vcross_low and Vcross_high are valid over
|               the device's minimum and maximum operating  conditions.
|
|               Subparameter Usage Rules:
|               Numerical arguments are separated from their associated
|               subparameter by an equals sign (=); white space around the
|               equals sign is optional.  The argument to the Reference_supply
|               subparameter is separated from the subparameter by white
|               space.
|
|               Vth at Minimum or Maximum Operating Conditions:
|               As described above, the Vth_min and Vth_max subparameters
|               define the minimum and maximum input threshold values under
|               typical operating conditions.  There is no provision for
|               directly specifying Vth under minimum or maximum operating
|               conditions.  Instead, these values are calculated using the
|               following equation:
|
|               Vth(min/max) = Vth* + [(Threshold_sensitivity) X
|                                          (change in supply voltage)]
|
|               where Vth* is either Vth, Vth_min or Vth_max as appropriate,
|               and the supply voltage is the one indicated by the
|               Reference_Supply subparameter.
|-------------------------------------------------------------------------
| A basic 3.3 V single ended receiver using only the required subparameters.
|
[Receiver Thresholds]
Vth = 1.5V
Vinh_ac = +225mV
Vinh_dc = +100mV
Vinl_ac = -225mV
Vinl_dc = -100mV
Tslew_ac = 1.2ns
|
| A single ended receiver using an external threshold reference.  In this
| case the input threshold is the external reference voltage so
| Threshold_sensitivity equals 1.
|
[Receiver Thresholds]
Vth = 1.0V
Threshold_sensitivity = 1
Reference_Supply Ext_ref
Vinh_ac = +200mV
Vinh_dc = +100mV
Vinl_ac = -200mV
Vinl_dc = -100mV
Tslew_ac = 400ps
|
```

```
| A fully specified single ended 3.3 V CMOS receiver
|
[Receiver Thresholds]
Vth = 1.5V
Vth_min = 1.45V
Vth_max = 1.53V
Threshold_sensitivity = 0.45
Reference_supply Power_clamp_ref
Vinh_ac = +200mV
Vinh_dc = +100mV
Vinl_ac = -200mV
Vinl_dc = -100mV
Tslew_ac = 400ps
|
| A differential receiver
|
[Receiver Thresholds]
Vcross_low = 0.65V
Vcross_high = 0.90V
Vdiff_ac = +200mV
Vdiff_dc = +100mV
Tdiffslew_ac = 200ps
|
|=============================================================================
|     Keyword:  [Add Submodel]
|    Required:  No
| Description:  References a submodel to be added to an existing model.
| Usage Rules:  The [Add Submodel] keyword is invoked within a model to add
|               the functionality that is contained in the submodel or list of
|               submodels in each line that follows.  The first column
|               contains the submodel name.  The second column contains a
|               submodel mode under which the submodel is used.
|
|               If the top-level model type is one of the I/O or 3-state
|               models, the submodel mode may be Driving, Non-Driving, or All.
|               For example, if the submodel mode is Non-Driving, then the
|               submodel is used only in the high-Z state of a 3-state model.
|               Set the submodel mode to All if the submodel is to be used for
|               all modes of operation.
|
|               The submodel mode cannot conflict with the top-level model
|               type.  For example, if the top-level model type is an Open or
|               Output type, the submodel mode cannot be set to Non-Driving.
|               Similarly, if the top-level model type is Input, the submodel
|               mode cannot be set to Driving.
|
|               The submodel mode can be set to All to cover all permitted
|               modes for any top-level model type including, for example,
|               Input, Output, and I/O.
|
|
|               The [Add Submodel] keyword is not defined for Series or
|               Series_switch model types.
|
|               Refer to the ADD SUBMODEL DESCRIPTION section in this document
|               for the descriptions of available submodels.
|-----------------------------------------------------------------------------
```

```
[Add Submodel]
| Submodel_name        Mode
Bus_Hold_1             Non-Driving  | Adds the electrical characteristics of
                                    | [Submodel] Bus_Hold_1 for receiver or
                                    | high-Z mode only.
Dynamic_clamp_1        All          | Adds the Dynmanic_clamp_1 model for
                                    | all modes of operation.
|
|=============================================================================
|     Keyword:  [Driver Schedule]
|    Required:  No
| Description:  Describes the relative model switching sequence for referenced
|               models to produce a multi-staged driver.
| Usage Rules:  The [Driver schedule] keyword establishes a hierarchical order
|               between models and should be placed under the [Model] which
|               acts as the top-level model.  The scheduled models are then
|               referenced from the top-level model by the [Driver Schedule]
|               keyword.
|
|               When a multi-staged buffer is modeled using the [Driver
|               Schedule] keyword, all of its stages (including the first
|               stage, or normal driver) have to be modeled as scheduled
|               models.
|
|               If there is support for this feature in a EDA tool, the
|               [Driver Schedule] keyword will cause it to use the [Pulldown],
|               [Pulldown Reference], [Pullup], [Pullup Reference],
|               [Voltage Range], [Ramp], [Rising Waveform] and
|               [Falling Waveform] keywords from the scheduled models
|               instead of the top-level model, according to the timing
|               relationships described in the [Driver Schedule] keyword.
|               Consequently, the keywords in the above list will be ignored
|               in the top-level model.  All of the remaining keywords not
|               shown in the above list, and all of the subparameters will be
|               used from the top-level model and should be ignored in the
|               scheduled model(s).
|
|               However, both the top-level and the scheduled model(s) have
|               to be complete models, i.e., all of the required keywords
|               must be present and follow the syntactical rules.
|
|               For backwards compatibility reasons and for EDA tools which
|               do not support multi-staged switching, the keywords in the
|               above list can be used in the top-level [Model] to describe
|               the overall characteristics of the buffer as if it was a
|               composite model.  It is not guaranteed, however, that such a
|               top-level model will yield the same simulation results as a
|               full multi-stage model.  It is recommended that a "golden
|               waveform" for the device consisting of a [Rising Waveform]
|               table and a [Falling Waveform] table be supplied in the
|               top-level model to serve as a reference for validation.
|
|               Even though some of the keywords are ignored in the scheduled
|               model, it may still make sense in some cases to supply
|               correct data with them.  One such situation would arise when a
|               [Model] is used both as a regular top-level model as well as a
|               scheduled model.
```

| The [Driver Schedule] table consists of five columns. The
| first column contains the model names of other models that
| exists in the .ibs file. The remaining four columns describe
| delays: Rise_on_dly, Rise_off_dly, Fall_on_dly, and
| Fall_off_dly. The t=0 time of each delay is the event when
| the EDA tool's internal pulse initiates a rising or falling
| transition. All specified delay values must be equal to or
| greater than 0. There are only five valid combinations in
| which these delay values can be defined:
|
| 1) Rise_on_dly with Fall_on_dly
| 2) Rise_off_dly with Fall_off_dly
| 3) Rise_on_dly with Rise_off_dly
| 4) Fall_on_dly with Fall_off_dly
| 5) All four delays defined
| (be careful about correct sequencing)
|
| The four delay parameters have the meaning as described
| below. (Note that this description applies to buffer types
| which have both pullup and pulldown structures. For those
| buffer types which have only a pullup or pulldown structure,
| the description for the missing structure can be omitted.)
|
| Rise_on_dly is the amount of time that elapses from the
| internal simulator pulse initiating a RISING edge to the
| t = 0 time of the waveform or ramp that turns the I-V table of
| the PULLUP device ON, and the t = 0 time of the waveform or
| ramp that turns the I-V table of the PULLDOWN device OFF (if
| they were not already turned ON and OFF, respectively, by
| another event).
|
| Rise_off_dly is the amount of time that elapses from the
| internal simulator pulse initiating a RISING edge to the
| t = 0 time of the waveform or ramp that turns the I-V table of
| the PULLUP device OFF, and the t = 0 time of the waveform or
| ramp that turns the I-V table of the PULLDOWN device ON (if
| they were not already turned ON and OFF, respectively, by
| another event).
|
| Fall_on_dly is the amount of time that elapses from the
| internal simulator pulse initiating a FALLING edge to the
| t = 0 time of the waveform or ramp that turns the I-V table of
| the PULLDOWN device ON, and the t = 0 time of the waveform or
| ramp that turns the I-V table of the PULLUP device OFF (if
| they were not already turned ON and OFF, respectively, by
| another event).
|
| Fall_off_dly is the amount of time that elapses from the
| internal simulator pulse initiating a FALLING edge to the
| t = 0 time of the waveform or ramp that turns the I-V table of
| the PULLDOWN device OFF, and the t = 0 time of the waveform or
| ramp that turns the I-V table of the PULLUP device ON (if
| they were not already turned ON and OFF, respectively, by
| another event).
|
| In the above four paragraphs, the word "event" refers to
| the moment in time when the delay is triggered by the

| stimulus. This stimulus is provided to the top-level
| model by the simulation tool. The expiration of delays
| cannot generate events.
|
| Note that some timing combinations may only be possible if
| the two halves of a complementary buffer are modeled
| separately as two open_* models.
|
| Use 'NA' when no delay value is applicable. For each
| scheduled model the transition sequence must be complete,
| i.e., the scheduled model must return to its initial state.
|
| No [Driver Schedule] table may reference a model which itself
| has within it a [Driver Schedule] keyword.
|
| Other Notes: The added models typically consist of Open_sink (Open_drain)
| or Open_source models to provide sequentially increased drive
| strengths. The added drive may be removed within the same
| transition for a momentary boost or during the opposite
| transition.
|
| The syntax also allows for reducing the drive strength.
|
| Note that the Rise_on_dly, Rise_off_dly, Fall_on_dly,
| Fall_off_dly parameters are single value parameters, so
| typical, minimum and maximum conditions cannot be described
| with them directly. In order to account for those effects,
| one can refer to the fastest waveform table with the delay
| number and then insert an appropriate amount of horizontal
| lead in section in those waveforms which need more delay.
|
| Notice that the C_comp parameter of a multi-stage buffer is
| defined in the top-level model. The value of C_comp
| therefore includes the total capacitance of the entire
| buffer, including all of its stages. Since the rising and
| falling waveform measurements include the effects of
| C_comp, each of these waveforms must be generated with the
| total C_comp present, even if the various stages of the
| buffer are characterized individually.
|
| Note: In a future release, the [Driver Schedule] keyword may
| be replaced by a newer method of specification that is
| consistent with some other planned extensions. However, the
| [Driver Schedule] syntax will continue to be supported.
|---

```
[Driver Schedule]
| Model_name     Rise_on_dly  Rise_off_dly  Fall_on_dly  Fall_off_dly
  MODEL_OUT      0.0ns        NA            0.0ns        NA
|
|                                  Examples of added multi-staged transitions
  M_O_SOURCE1     0.5ns        NA            0.5ns        NA
|               low (high-Z) to high        high to low (high-Z)
  M_O_SOURCE2     0.5n         1.5n          NA           NA
|               low to high to low           low (high-Z)
  M_O_DRAIN1      1.0n         NA            1.5n         NA
|               low to high (high-Z)        high (high-Z) to low
  M_O_DRAIN2      NA           NA            1.5n         2.0n
|                   high (high-Z)           high to low to high
|
|=============================================================================
|     Keyword:  [Temperature Range]
|    Required:  Yes, if other than the preferred 0, 50, 100 degree Celsius
|               range
| Description:  Defines the temperature range over which the model is to
|               operate.
| Usage Rules:  List the actual die temperatures (not percentages) in the typ,
|               min, max format.  "NA" is allowed for min and max only.
| Other Notes:  The [Temperature Range] keyword also describes the temperature
|               range over which the various I-V tables and ramp rates were
|               derived.  Refer to NOTES ON DATA DERIVATION METHODS for rules
|               on which temperature values to put in the 'min' and 'max'
|               columns.
|-----------------------------------------------------------------------------
| variable              typ            min            max
[Temperature Range]     27.0           -50            130.0
|
|=============================================================================
|     Keyword:  [Voltage Range]
|    Required:  Yes, if [Pullup Reference], [Pulldown Reference], [POWER
|               Clamp Reference], and [GND Clamp Reference] are not present
| Description:  Defines the power supply voltage tolerance over which the
|               model is intended to operate.  It also specifies the default
|               voltage rail to which the [Pullup] and [POWER Clamp] I-V data
|               is referenced.
| Usage Rules:  Provide actual voltages (not percentages) in the typ, min, max
|               format.  "NA" is allowed for the min and max values only.
| Other Notes:  If the [Voltage Range] keyword is not present, then all four
|               of the keywords described below must be present: [Pullup
|               Reference], [Pulldown Reference], [POWER Clamp Reference],
|               and [GND Clamp Reference].  If the [Voltage Range] is present,
|               the other keywords are optional and may or may not be used as
|               required.  It is legal (although redundant) for an optional
|               keyword to specify the same voltage as specified by the
|               [Voltage Range] keyword.
|-----------------------------------------------------------------------------
| variable              typ            min            max
[Voltage Range]         5.0V           4.5V           5.5V
|
|=============================================================================
```

|==
| **Keyword: [Pullup Reference]**
| Required: Yes, if the [Voltage Range] keyword is not present
| Description: Defines a voltage rail other than that defined by the [Voltage
| Range] keyword as the reference voltage for the [Pullup] I-V
| data.
| Usage Rules: Provide actual voltages (not percentages) in the typ, min, max
| format. "NA" is allowed for the min and max values only.
| Other Notes: This keyword, if present, also defines the voltage range over
| which the typ, min, and max dV/dt_r values are derived.
|--
| variable typ min max
[Pullup Reference] 5.0V 4.5V 5.5V
|
|==
| **Keyword: [Pulldown Reference]**
| Required: Yes, if the [Voltage Range] keyword is not present
| Description: Defines a power supply rail other than 0 V as the reference
| voltage for the [Pulldown] I-V data. If this keyword is not
| present, the voltage data points in the [Pulldown] I-V table
| are referenced to 0 V.
| Usage Rules: Provide actual voltages (not percentages) in the typ, min, max
| format. "NA" is allowed for the min and max values only.
| Other Notes: This keyword, if present, also defines the voltage range over
| which the typ, min, and max dV/dt_f values are derived.
|--
| variable typ min max
[Pulldown Reference] 0V 0V 0V
|
|==
| **Keyword: [POWER Clamp Reference]**
| Required: Yes, if the [Voltage Range] keyword is not present
| Description: Defines a voltage rail other than that defined by the [Voltage
| Range] keyword as the reference voltage for the [POWER Clamp]
| I-V data.
| Usage Rules: Provide actual voltages (not percentages) in the typ, min,
| max format. "NA" is allowed for the min and max values only.
| Other Notes: Refer to the "Other Notes" section of the [GND Clamp
| Reference] keyword.
|--
| variable typ min max
[POWER Clamp Reference] 5.0V 4.5V 5.5V
|
|==
| **Keyword: [GND Clamp Reference]**
| Required: Yes, if the [Voltage Range] keyword is not present
| Description: Defines a power supply rail other than 0 V as the reference
| voltage for the [GND Clamp] I-V data. If this keyword is not
| present, the voltage data points in the [GND Clamp] I-V table
| are referenced to 0 V.
| Usage Rules: Provide actual voltages (not percentages) in the typ, min, max
| format. "NA" is allowed for the min and max values only.
| Other Notes: Power Supplies: It is intended that standard TTL and CMOS
| models be specified using only the [Voltage Range] keyword.
| However, in cases where the output characteristics of a model
| depend on more than a single supply and ground, or a [Pullup],
| [Pulldown], [POWER Clamp], or [GND Clamp] table is referenced

| to something other than the default supplies, use the
| additional 'reference' keywords.
|---
| variable | typ | min | max
[GND Clamp Reference] | 0V | 0V | 0V
|
|===

| **Keyword:** **[External Reference]**
| **Required:** Yes, if a receiver's input threshold is determined by an external reference voltage
| **Description:** Defines a voltage source that supplies the reference voltage used by a receiver for its input threshold reference.
| **Usage Notes:** Provide actual voltages (not percentages in the typ, min max format. "NA" is allowed for the min and max values only. Note that the numerically largest value should be placed in 'max' column, while the numerically smallest value should be placed in the 'min' column.
|---
| variable | typ | min | max
[External Reference] | 1.00V | 0.95V | 1.05V
|
|===

| **Keywords:** **[TTgnd], [TTpower]**
| **Required:** No
| **Description:** These keywords specify the transit time parameters used to estimate the transit time capacitances or develop transit time capacitance tables for the [GND Clamp] and [POWER Clamp] tables.
| **Usage Rules:** For each of these keywords, the three columns hold the transit values corresponding to the typical, minimum and maximum [GND Clamp] or [POWER Clamp] tables, respectively. The entries for TT(typ), TT(min), and TT(max) must be placed on a single line and must be separated by at least one white space. All three columns are required under these keywords. However, data is required only in the typical column. If minimum and/or maximum values are not available, the reserved word "NA" must be used indicating the TT(typ) value by default.
| **Other Notes:** The transit time capacitance is added to C_comp. It is in a SPICE reference model as Ct = TT * d(Id)/d(Vd) where d(Id)/d(Vd) defines the DC conductance at the incremental DC operating point of the diode, and TT is the transit time. This expression does not include any internal series resistance. Such a resistance is assumed to be negligible in practice. Assume that the internal diode current (Id) - voltage (Vd) relationship is Id = Is * (exp(q(Vd)/kT) - 1) where Is is the saturation current, q is electron charge, k is Boltzmann's constant, and T is temperature in degrees Kelvin. Then d(Id)/d(Vd) is approximately (q/kT) * Id when the diode is conducting, and zero otherwise. This yields the simplification Ct = TT * (q/kT) * Id. The Id is found from the [GND Clamp] and [POWER Clamp] operating points, and the corresponding TTgnd or TTpower is used to calculate the Ct value. If the [Temperature Range] keyword is not defined, then use the default "typ" temperature for all Ct calculations.
|

| The effective TT parameter values are intended to APPROXIMATE
| the effects. They may be different from the values found in
| the SPICE diode equations. Refer to the NOTES ON DATA
| DERIVATION METHOD for extracting the effective values.
|---
| variable TT(typ) TT(min) TT(max)
[TTgnd] 10n 12n 9n
[TTpower] 12n NA NA
|
|===
| **Keywords:** **[Pulldown], [Pullup], [GND Clamp], [POWER Clamp]**
| Required: Yes, if they exist in the model
| Description: The data points under these keywords define the I-V tables of
| the pulldown and pullup structures of an output buffer and the
| I-V tables of the clamping diodes connected to the GND and the
| POWER pins, respectively. Currents are considered positive
| when their direction is into the component.
| Usage Rules: In each of these sections, the first column contains the
| voltage value, and the three remaining columns hold the
| typical, minimum, and maximum current values. The four
| entries, Voltage, I(typ), I(min), and I(max) must be placed on
| a single line and must be separated by at least one white
| space.
|
| All four columns are required under these keywords. However,
| data is only required in the typical column. If minimum
| and/or maximum current values are not available, the reserved
| word "NA" must be used. "NA" can be used for currents in the
| typical column, but numeric values MUST be specified for the
| first and last voltage points on any I-V table. Each I-V
| table must have at least 2, but not more than 100, rows.
|
| Other Notes: The I-V table of the [Pullup] and the [POWER Clamp] structures
| are 'Vcc relative', meaning that the voltage values are
| referenced to the Vcc pin. (Note: Under these keywords, all
| references to 'Vcc' refer to the voltage rail defined by the
| [Voltage Range], [Pullup Reference], or [POWER Clamp
| Reference] keywords, as appropriate.) The voltages in the
| data tables are derived from the equation: Vtable = Vcc -
| Voutput.
|
| Therefore, for a 5 V model, -5 V in the table actually
| means 5 V above Vcc, which is +10 V with respect to ground;
| and 10 V means 10 V below Vcc, which is -5 V with respect to
| ground. Vcc-relative data is necessary to model a pullup
| structure properly, since the output current of a pullup
| structure depends on the voltage between the output and Vcc
| pins and not the voltage between the output and ground pins.
| Note that the [GND Clamp] I-V table can include quiescent
| input currents, or the currents of a 3-stated output, if so
| desired.
|
| When tabulating data for ECL models, the data in the
| [Pulldown] table is measured with the output in the 'logic
| low' state. In other words, the data in the table represents
| the I-V characteristics of the output when the output is at
| the most negative of its two logic levels. Likewise, the data

in the [Pullup] table is measured with the output in the 'logic one' state and represents the I-V characteristics when the output is at the most positive logic level. Note that in BOTH of these cases, the data is referenced to the Vcc supply voltage, using the equation: Vtable = Vcc - Voutput.

Monotonicity Requirements:

To be monotonic, the I-V table data must meet any one of the following 8 criteria:

1- The CURRENT axis either increases or remains constant as the voltage axis is increased.
2- The CURRENT axis either increases or remains constant as the voltage axis is decreased.
3- The CURRENT axis either decreases or remains constant as the voltage axis is increased.
4- The CURRENT axis either decreases or remains constant as the voltage axis is decreased.

5- The VOLTAGE axis either increases or remains constant as the current axis is increased.
6- The VOLTAGE axis either increases or remains constant as the current axis is decreased.
7- The VOLTAGE axis either decreases or remains constant as the current axis is increased.
8- The VOLTAGE axis either decreases or remains constant as the current axis is decreased.

An IBIS syntax checking program shall test for non-monotonic data and provide a maximum of one warning per I-V table if non-monotonic data is found. For example:

> "Warning: Line 300, Pulldown I-V table for model DC040403 is non-monotonic! Most simulators will filter this data to remove the non-monotonic data."

It is also recognized that the data may be monotonic if currents from both the output stage and the clamp diode are added together as most simulators do. To limit the complexity of the IBIS syntax checking programs, such programs will conduct monotonicity testing only on one I-V table at a time.

It is intended that the [POWER Clamp] and [GND Clamp] tables are summed together and then added to the appropriate [Pullup] or [Pulldown] table when a buffer is driving high or low, respectively.

From this assumption and the nature of 3-statable buffers, it follows that the data in the clamping table sections are handled as constantly present tables and the [Pullup] and [pulldown] tables are used only when needed in the simulation.

The clamp tables of an Input or I/O buffer can be measured directly with a curve tracer, with the I/O buffer 3-stated. However, sweeping enabled buffers results in tables that are the sum of the clamping tables and the output structures. Based on the assumption outlined above, the [Pullup] and

```
|                [Pulldown] tables of an IBIS model must represent the
|                difference of the 3-stated and the enabled buffer's tables.
|                (Note that the resulting difference table can demonstrate a
|                non-monotonic shape.)  This requirement enables the simulator
|                to sum the tables, without the danger of double counting, and
|                arrive at an accurate model in both the 3-stated and enabled
|                conditions.
|
|                Since in the case of a non 3-statable buffer, this difference
|                table cannot be generated through lab measurements (because
|                the clamping tables cannot be measured alone), the [Pullup]
|                and [Pulldown] tables of an IBIS model can contain the sum of
|                the clamping characteristics and the output structure.  In
|                this case, the clamping tables must contain all zeroes, or the
|                keywords must be omitted.
|-------------------------------------------------------------------------------
[Pulldown]
|  Voltage   I(typ)    I(min)    I(max)
|
   -5.0V    -40.0m    -34.0m    -45.0m
   -4.0V    -39.0m    -33.0m    -43.0m
|    .
|    .
    0.0V      0.0m      0.0m      0.0m
|    .
|    .
    5.0V     40.0m     34.0m     45.0m
   10.0V     45.0m     40.0m     49.0m
|
[Pullup]                                | Note: Vtable = Vcc - Voutput
|
|  Voltage   I(typ)    I(min)    I(max)
|
   -5.0V     32.0m     30.0m     35.0m
   -4.0V     31.0m     29.0m     33.0m
|    .
|    .
    0.0V      0.0m      0.0m      0.0m
|    .
|    .
    5.0V    -32.0m    -30.0m    -35.0m
   10.0V    -38.0m    -35.0m    -40.0m
|
[GND Clamp]
|
|  Voltage   I(typ)    I(min)    I(max)
|
   -5.0V  -3900.0m  -3800.0m  -4000.0m
   -0.7V    -80.0m    -75.0m    -85.0m
   -0.6V    -22.0m    -20.0m    -25.0m
   -0.5V     -2.4m     -2.0m     -2.9m
   -0.4V      0.0m      0.0m      0.0m
    5.0V      0.0m      0.0m      0.0m
|
```

```
[POWER Clamp]                          | Note: Vtable = Vcc - Voutput
|
|  Voltage   I(typ)    I(min)    I(max)
|
   -5.0V   4450.0m       NA        NA
   -0.7V     95.0m       NA        NA
   -0.6V     23.0m       NA        NA
   -0.5V      2.4m       NA        NA
   -0.4V      0.0m       NA        NA
    0.0V      0.0m       NA        NA
|
|=============================================================================
|    Keywords:  [Rgnd], [Rpower], [Rac], [Cac]
|    Required:  Yes, if they exist in the model
| Description:  The data for these keywords define the resistance values of
|               Rgnd and Rpower connected to GND and the POWER pins,
|               respectively, and the resistance and capacitance values for an
|               AC terminator.
| Usage Rules:  For each of these keywords, the three columns hold the
|               typical, minimum, and maximum resistance values.  The three
|               entries for R(typ), R(min), and R(max), or the three entries
|               for C(typ), C(min), and C(max) must be placed on a single line
|               and must be separated by at least one white space.  All three
|               columns are required under these keywords.  However, data is
|               only required in the typical column.  If minimum and/or
|               maximum values are not available, the reserved word "NA" must
|               be used indicating the R(typ) or C(typ) value by default.
| Other Notes:  It should be noted that [Rpower] is connected to 'Vcc' and
|               [Rgnd] is connected to 'GND'.  However, [GND Clamp Reference]
|               voltages, if defined, apply to [Rgnd].  [POWER Clamp
|               Reference] voltages, if defined, apply to [Rpower].  Either or
|               both [Rgnd] and [Rpower] may be defined and may coexist with
|               [GND Clamp] and [POWER Clamp] tables.  If the terminator
|               consists of a series R and C (often referred to as either an
|               AC or RC terminator), then both [Rac] and [Cac] are required.
|               When [Rgnd], [Rpower], or [Rac] and [Cac] are specified, the
|               Model_type must be Terminator.
|
```

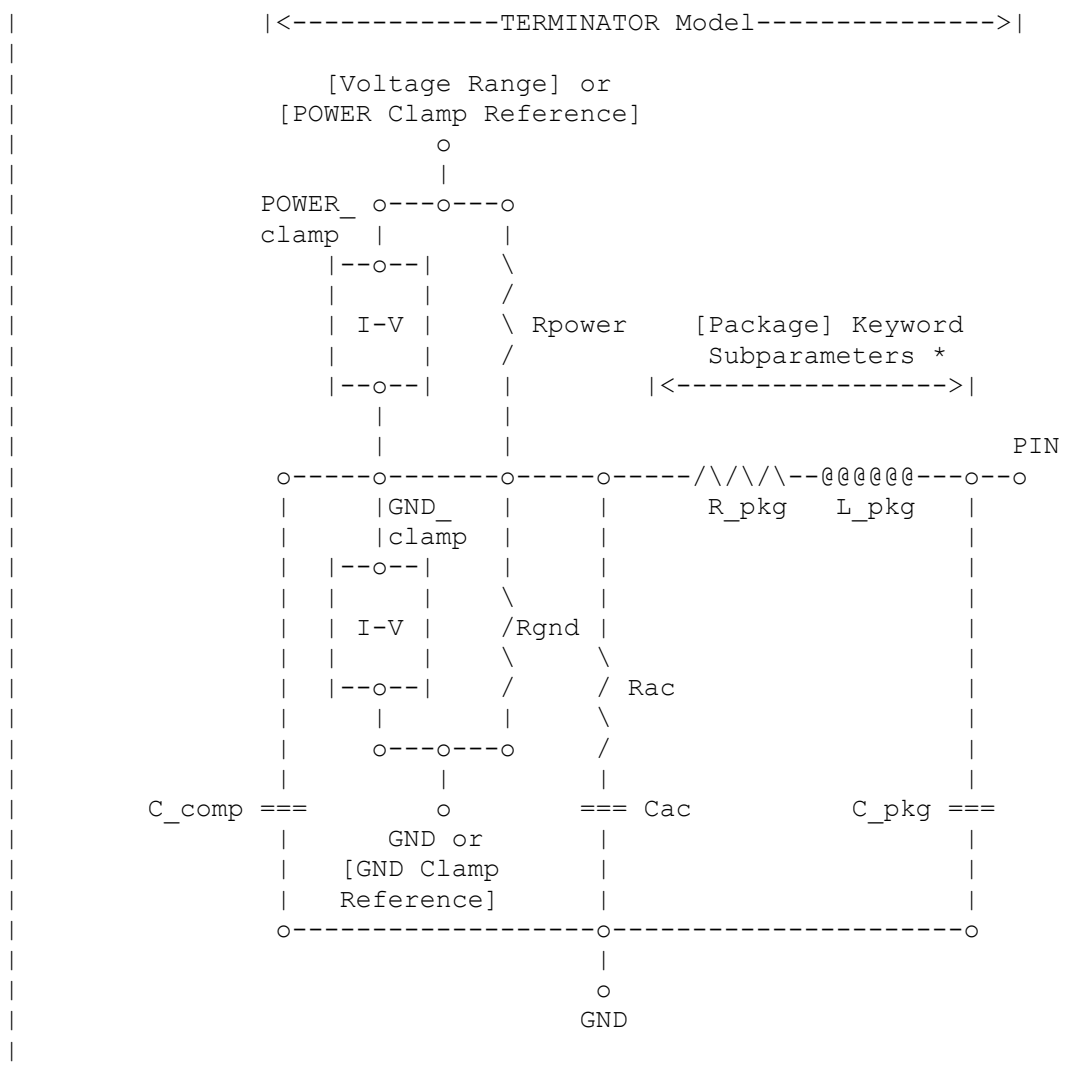

* Note: More advanced package parameters are available within this standard, including more detailed power and ground net descriptions.

variable	R(typ)	R(min)	R(max)	
[Rgnd]	330ohm	300ohm	360ohm	Parallel Terminator
[Rpower]	220ohm	200ohm	NA	
[Rac]	30ohm	NA	NA	

variable	C(typ)	C(min)	C(max)	
[Cac]	50pF	NA	NA	AC terminator

Keywords: **[On], [Off]**

Required: Yes, both [On] and [Off] for Series_switch Model_types only

Description: The 'On' state electrical models are positioned under [On]. The 'Off' state electrical models are positioned under [Off].

Usage Rules: These keywords are only valid for Series_switch Model_types. Only keywords associated with Series_switch electrical models are permitted under [On] or [Off]. The Series electrical models describe the path for one state only and do not use

| the [On] and [Off] keywords.
|
| In Series_switch models, [On] or [Off] must be positioned
| before any of the [R Series], [L Series], Rl Series],
| [C Series], [Lc Series], [Rc Series], [Series Current],
| and [Series MOSFET] keywords. There is no provision for
| any of these keywords to be defined once, but to apply to
| both states.
|---
[On]
| ... On state keywords such as [R Series], [Series Current], [Series MOSFET]
[Off]
| ... Off state keywords such as [R Series], [Series Current]
|
|===
| **Keywords: [R Series], [L Series], [Rl Series], [C Series], [Lc Series],**
| **[Rc Series]**
| Required: Yes, if they exist in the model
| Description: The data for these keywords allow the definition of Series or
| Series_switch R, L or C paths.
| Usage Rules: For each of these keywords, the three columns hold the
| typical, minimum, and maximum resistance values. The three
| entries must be placed on a single line and must be separated
| by at least one white space. All three columns are required
| under these keywords. However, data is only required in the
| typical column. If minimum and/or maximum values are not
| available, the reserved word "NA" must be used.
| Other Notes: This series RLC model is defined to allow IBIS to model simple
| passive models and/or parasitics.
|
| These keywords are valid only for Series or Series_switch
| Model_types.
|
| The model is:
|
| 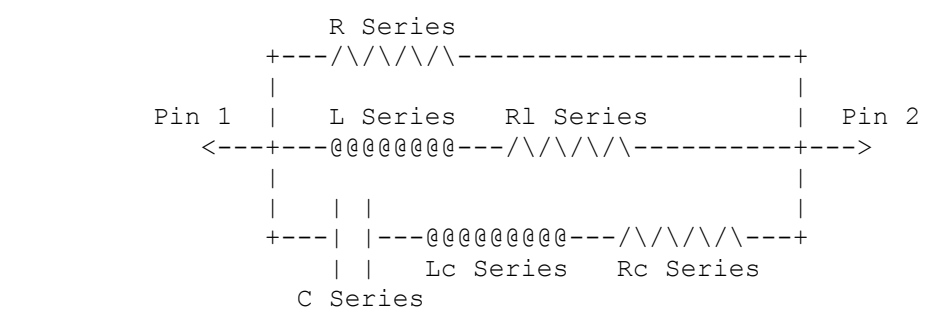
|
|
| [Rl Series] shall be defined only if [L Series] exists.
| [Rl Series] is 0 ohms if it is not defined in the path.
|
| [Rc Series] and [Lc Series] shall be defined only if
| [C Series] exists. [Rc Series] is 0 ohms if it is not
| defined in the path. [Lc Series] is 0 henries if it is
| not defined in the path.
|
| C_comp values are ignored for series models.
|---

```
| variable      R(typ)          R(min)          R(max)
[R Series]      8ohm            6ohm            12ohm
|
| variable      L(typ)          L(min)          L(max)
[L Series]      5nH             NA              NA
| variable      R(typ)          R(min)          R(max)
[Rl Series]     4ohm            NA              NA
|
| variable      C(typ)          C(min)          C(max)  | The other elements
[C Series]      50pF            NA              NA      | are 0 impedance
|
|=============================================================================
|     Keyword:  [Series Current]
|    Required:  Yes, if they exist in the model
| Description:  The data points under this keyword define the I-V tables for
|               voltages measured at Pin 1 with respect to Pin 2.  Currents
|               are considered positive if they flow into Pin 1.  Pins 1 and
|               2 are listed under the [Series Pin Mapping] keyword under
|               columns [Series Pin Mapping] and pin_2, respectively.
| Usage Rules:  The first column contains the voltage value, and the remaining
|               columns hold the typical, minimum, and maximum current values.
|               The four entries, Voltage, I(typ), I(min), and I(max) must be
|               placed on a single line and must be separated by at least one
|               white space.
|
|               All four columns are required under these keywords.  However,
|               data is only required in the typical column.  If minimum
|               and/or maximum current values are not available, the reserved
|               word "NA" must be used.  "NA" can be used for currents in the
|               typical column, but numeric values MUST be specified for the
|               first and last voltage points on any I-V table.  Each I-V
|               table must have at least 2, but not more than 100 rows.
|
| Other Notes:  There is no monotonicity requirement. However the model
|               supplier should realize that it may not be possible to derive
|               a behavioral model from non-monotonic data.
|
|               This keyword is valid only for Series or Series_switch
|               Model_types.
|
|               The model is:
|
|                                  Table Current
|                                     ------>
|                                +  Table Voltage  -
|                           Pin 1  |---------|  Pin 2
|                              <---+         +--->
|                                  |---------|
|
|               C_comp values are ignored for [Series Current] models.
|-----------------------------------------------------------------------------
```

```
[Series Current]
|  Voltage   I(typ)    I(min)    I(max)
   -5.0V  -3900.0m  -3800.0m  -4000.0m
   -0.7V    -80.0m    -75.0m    -85.0m
   -0.6V    -22.0m    -20.0m    -25.0m
   -0.5V     -2.4m     -2.0m     -2.9m
   -0.4V      0.0m      0.0m      0.0m
    5.0V      0.0m      0.0m      0.0m
|
|================================================================================
|     Keyword:  [Series MOSFET]
|    Required:  Yes, for series MOSFET switches
| Description:  The data points under this keyword define the I-V tables for
|               voltages measured at Pin 2 for a given Vds setting.  Currents
|               are considered positive if they flow into Pin 1.  Pins 1 and
|               2 are listed under the [Series Pin Mapping] keyword under
|               [Series Pin Mapping] and pin_2 columns, respectively.
|  Sub-Params:  Vds
| Usage Rules:  The first column contains the voltage value, and the three
|               remaining columns hold the typical, minimum, and maximum
|               current values.  The four entries, Voltage, I(typ), I(min),
|               and I(max) must be placed on a single line and must be
|               separated by at least one white space.
|
|               All four columns are required under this keyword.  However,
|               data is only required in the typical column.  If minimum
|               and/or maximum current values are not available, the reserved
|               word "NA" must be used.  "NA" can be used for currents in the
|               typical column, but numeric values MUST be specified for the
|               first and last voltage points on any I-V table.  Each I-V
|               table must have at least 2, but not more than 100 rows.
|
| Other Notes:  There is no monotonicity requirement. However the model
|               supplier should realize that it may not be possible to derive
|               a behavioral model from non-monotonic data.
|
|
|                                  Table Current
|                                     ------->  Ids
|                                   +     Vds     -
|
|                                         Vcc
|                                          | g
|                                        __|__
|                                        -----  NMOS
|                                 Pin 1 |     |    Pin 2
|                                   <---+     +--->  +  Voltage = Vcc - Vs
|                                   d   |_____|   s
|                                  PMOS  --+--       Vs
|                                          | g
|                                         GND        -
|
|               Either of the FETs could be removed (or have zero current
|               contribution).  Thus this model covers all four conditions,
|               off, single NMOS, single PMOS and parallel NMOS/PMOS.
|
```

Voltage = Table Voltage = Vtable = Vcc - Vs
Ids = Table Current for a given Vcc and Vds

Internal Logic that is generally referenced to the power rail is used to set the NMOS MOSFET switch to its 'ON' state. Internal logic likewise referenced to ground is used to set the PMOS device to its 'ON' state if the PMOS device is present. Thus the [Voltage Range] settings provide the assumed gate voltages. If the [POWER Clamp Reference] exists, it overrides the [Voltage Range] value. The table entries are actually Vgs values of the NMOS device and Vcc - Vgs values of the PMOS device, if present. The polarity conventions are identical with those used for other tables that are referenced to power rails. Thus the voltage column can be viewed as a table defining the source voltages Vs according to the convention: Vtable = Vcc - Vs. This convention remains even without the NMOS device.

If the switch is used in an application such as interfacing between 3.3 V and 5.0 V logic, the Vcc may be biased at a voltage (such as 4.3 V) that is different from a power rail voltage (such as 5.0 V) used to create the model. Just readjust the [Voltage Range] entries (or [POWER Clamp Reference] entries).

One fundamental assumption in the MOSFET switch model is that it operates in a symmetrical manner. The tables and expressions are given assuming that Vd >= Vs. If Vd < Vs, then apply the same relationships under the assumption that the source and drain nodes are interchanged. A consequence of this assumption is that the Vds subparameter is constrained to values Vds > 0. It is assumed that with Vds = 0 the currents will be 0 mA. A further consequence of this assumption that would be embedded in the analysis process is that the voltage table is based on the side of the model with the lowest voltage (and that side is defined as the source). Thus the analysis must allow current to flow in both directions, as would occur due to reflections when the switch is connected in series with an unterminated transmission line.

The model data is used to create an On state relationship between the actual drain to source current, ids, and the actual drain to source voltage, vds:

$$ids = f(vds).$$

This functional relationship depends on the actual source voltage Vs and can be expressed in terms of the corresponding table currents associated with Vs (and expressed as a function of Vtable).

If only one [Series MOSFET] table is supplied (as a first order approximation), the functional relationship is assumed to be linearly related to the table drain to source current, Ids, for the given Vds subparameter value and located at the existing gate to source voltage value Vtable. This table current is denoted as Ids(Vtable, Vds). The functional

```
|               relationship  becomes:
|
|                          ids = Ids(Vtable, Vds) * vds/Vds.
|
|               More than one [Series MOSFET] table under a [Model] keyword
|               is permitted.  However, the usage of this data is simulator
|               dependent.  Each table must begin with the [Series MOSFET]
|               keyword and Vds subparameter.  Each successive
|               [Series MOSFET] table must have a different subparameter
|               value for Vds.  The number of tables for any specific
|               [Model] must not exceed 100.
|
|               C_comp values are ignored for [Series MOSFET] models.
|-------------------------------------------------------------------------------
| An NMOS Example
|
[On]
[Series MOSFET]
Vds = 1.0
|  Voltage   I(typ)    I(min)    I(max)
    5.0V    257.9m     153.3m    399.5m    | Defines the Ids current as a
    4.0V    203.0m     119.4m    317.3m    | function of Vtable, for Vds = 1.0
    3.0V    129.8m      74.7m    205.6m
    2.0V     31.2m      16.6m     51.0m
    1.0V     52.7p      46.7p     56.7p
    0.0V      0.0p       0.0p      0.0p
|
| A PMOS/NMOS Example
|
[On]
[Series MOSFET]
Vds = 0.5
|  Voltage   I(typ)    I(min)     I(max)
0.0 48.6ma NA NA
0.1 47.7ma NA NA
0.2 46.5ma NA NA
0.3 46.1ma NA NA
0.4 45.3ma NA NA
0.5 44.4ma NA NA
0.6 42.9ma NA NA
0.7 42.3ma NA NA
0.8 41.2ma NA NA
0.9 39.7ma NA NA
1.0 38.6ma NA NA
1.1 38.1ma NA NA
1.2 38.6ma NA NA
1.3 40.7ma NA NA
1.4 45.0ma NA NA
1.5 49.2ma NA NA
1.6 52.3ma NA NA
1.7 55.1ma NA NA
1.8 57.7ma NA NA
1.9 58.8ma NA NA
2.0 58.9ma NA NA
2.1 59.2ma NA NA
2.2 59.3ma NA NA
2.3 59.4ma NA NA
```

```
2.4 59.8ma NA NA
2.5 60.1ma NA NA
2.6 61.8ma NA NA
2.7 62.3ma NA NA
2.8 63.4ma NA NA
2.9 64.4ma NA NA
3.0 65.3ma NA NA
3.1 66.0ma NA NA
3.2 66.8ma NA NA
3.3 68.2ma NA NA
|
|=============================================================================
|     Keyword:  [Ramp]
|    Required:  Yes, except for inputs, terminators, Series and Series_switch
|               model types
| Description:  Defines the rise and fall times of a buffer.  The ramp rate
|               does not include packaging but does include the effects of the
|               C_comp or C_comp_* parameters.
|  Sub-Params:  dV/dt_r, dV/dt_f, R_load
| Usage Rules:  The rise and fall time is defined as the time it takes the
|               output to go from 20% to 80% of its final value.  The ramp
|               rate is defined as:
|
|                       dV          20% to 80% voltage swing
|                       -- = ----------------------------------------
|                       dt   Time it takes to swing the above voltage
|
|               The ramp rate must be specified as an explicit fraction and
|               must not be reduced.  The [Ramp] values can use "NA" for the
|               min and max values only.  The R_load subparameter is optional
|               if the default 50 ohm load is used.  The R_load subparameter
|               is required if a non-standard load is used.
|-----------------------------------------------------------------------------
[Ramp]
| variable      typ             min             max
dV/dt_r         2.20/1.06n      1.92/1.28n      2.49/650p
dV/dt_f         2.46/1.21n      2.21/1.54n      2.70/770p
R_load = 300ohms
|
|=============================================================================
|    Keywords:  [Rising Waveform], [Falling Waveform]
|    Required:  No
| Description:  Describes the shape of the rising and falling edge waveforms
|               of a driver.
|  Sub-Params:  R_fixture, V_fixture, V_fixture_min, V_fixture_max, C_fixture,
|               L_fixture, R_dut, L_dut, C_dut
| Usage Rules:  Each [Rising Waveform] and [Falling Waveform] keyword
|               introduces a table of voltage versus time points that describe
|               the shape of an output waveform.  These voltage versus time
|               points are taken under the conditions specified by the
|               R/L/C/V_fixture and R/L/C_dut subparameters.  The table itself
|               consists of one column of time points, then three columns of
|               voltage points in the standard typ, min, and max format.  The
|               four entries must be placed on a single line and must be
|               separated by at least one white space.  All four columns are
|               required.  However, data is only required in the typical
|               column.  If minimum or maximum data is not available, use the
```

reserved word "NA". The first value in the time column need not be '0'. Time values must increase as one parses down the table. The waveform table can contain a maximum of 1000 data rows. A maximum of 100 waveform tables are allowed per model.

Note that for backward compatibility, the existing [Ramp] keyword is still required. The data in the waveform table is taken with the effects of the C_comp parameter included.

A waveform table must include the entire waveform; i.e., the first entry (or entries) in a voltage column must be the DC voltage of the output before switching and the last entry (or entries) of the column must be the final DC value of the output after switching. Each table must contain at least two entries. Thus, numerical values are required for the first and last entries of any column containing numerical data.

The data in all of the waveform tables should be time correlated. In other words, the edge data in each of the tables (rising and falling) should be entered with respect to a single point in time when the input stimulus is assumed to have initiated a logic transition. All waveform extractions should reference a common input stimulus time in order to provide a sufficiently accurate alignment of waveforms. The first line in each waveform table should be assumed to be the reference point in time corresponding to a logic transition. For example, assume that some internal rising edge logic transition starts at time = 0. Then a rising edge voltage-time table might be created starting at time zero. The first several table entries might be some "lead-in" time caused by some undefined internal buffer delay before the voltage actually starts transitioning. The falling edge stimulus (for the purpose of setting reference time for the voltage-time table) should also start at time = 0. And, the falling edge voltage-time table would be created starting at time zero with a possibly different amount of "lead-in" time caused by a possibly different but corresponding falling edge internal buffer delay. Any actual device differences in internal buffer delay time between rising and falling edges should appear as differing lead-in times between the rising and the falling waveforms in the tables just as any differences in actual device rise and fall times appear as differing voltage-time entries in the tables.

A [Model] specification can contain more than one rising edge or falling edge waveform table. However, each new table must begin with the appropriate keyword and subparameter list as shown below. If more than one rising or falling edge waveform table is present, then the data in each of the respective tables must be time correlated. In other words, the rising (falling) edge data in each of the rising (falling) edge waveform tables must be entered with respect to a common reference point on the input stimulus waveform.

The 'fixture' subparameters specify the loading conditions under which the waveform is taken. The R_dut, C_dut, and L_dut subparameters are analogous to the package parameters

```
|               R_pkg, C_pkg, and L_pkg and are used if the waveform includes
|               the effects of pin inductance/capacitance.  The diagram below
|               shows the interconnection of these elements.
|
|                      PACKAGE            |   TEST FIXTURE
|       _________                         |
|      |  DUT    |   L_dut   R_dut        | L_fixture  R_fixture
|      |  die    |---@@@@@--/\/\/\--o-----|--@@@@---o---/\/\/\----- V_fixture
|      |_________|                  |     |         |
|                                  |     |         |
|                                  |     |         |
|                           C_dut ===    |        === C_fixture
|                                  |     |         |
|                                  |     |         |
|                                 GND    |        GND
|
|               NOTE:  The use of L_dut, R_dut, and C_dut is strongly
|               discouraged in developing Waveform data from simulation
|               models.  Some simulators may ignore these parameters because
|               they may introduce numerical time constant artifacts.
|
|               Only the R_fixture and V_fixture subparameters are required,
|               the rest of the subparameters are optional.  If a subparameter
|               is not used, its value defaults to zero.  The subparameters
|               must appear in the text after the keyword and before the first
|               row of the waveform table.
|
|               V_fixture defines the voltage for typ, min, and max supply
|               conditions.  However, when the fixture voltage is related to
|               the power supply voltages, then the subparameters
|               V_fixture_min and V_fixture_max can be used to further specify
|               the fixture voltage for min and max supply voltages.
|
|               NOTE:  Test fixtures with R_fixture and V_fixture,
|               V_fixture_min, and V_fixture_max only are strongly encouraged
|               because they provide the BEST set of data needed to produce
|               the best model for simulation.  C_fixture and L_fixture can be
|               used to produce waveforms which describe the typical test case
|               setups for reference.
|
|               NOTE:  In most cases two [Rising Waveform] tables and two
|               [Falling Waveform] tables will be necessary for accurate
|               modeling.
|
|               All tables assume that the die capacitance is included.
|               Potential numerical problems associated with processing the
|               data using the effective C_comp (or C_comp_* values as
|               appropriate) for effective die capacitance may be handled
|               differently among simulators.
|-----------------------------------------------------------------------------
```

```
[Rising Waveform]
R_fixture = 50
V_fixture = 0.0
| C_fixture = 50p        | These are shown, but are generally not recommended
| L_fixture = 2n
| C_dut = 7p
| R_dut = 1m
| L_dut = 1n
| Time            V(typ)             V(min)             V(max)
   0.0000s       25.2100mV          15.2200mV          43.5700mV
   0.2000ns       2.3325mV          -8.5090mV          23.4150mV
   0.4000ns       0.1484V           15.9375mV           0.3944V
   0.6000ns       0.7799V            0.2673V            1.3400V
   0.8000ns       1.2960V            0.6042V            1.9490V
   1.0000ns       1.6603V            0.9256V            2.4233V
   1.2000ns       1.9460V            1.2050V            2.8130V
   1.4000ns       2.1285V            1.3725V            3.0095V
   1.6000ns       2.3415V            1.5560V            3.1265V
   1.8000ns       2.5135V            1.7015V            3.1600V
   2.0000ns       2.6460V            1.8085V            3.1695V
| ...
  10.0000ns       2.7780V            2.3600V            3.1670V
|
[Falling Waveform]
R_fixture = 50
V_fixture = 5.5
V_fixture_min = 4.5
V_fixture_max = 5.5
| Time            V(typ)             V(min)             V(max)
   0.0000s        5.0000V            4.5000V            5.5000V
   0.2000ns       4.7470V            4.4695V            4.8815V
   0.4000ns       3.9030V            4.0955V            3.5355V
   0.6000ns       2.7313V            3.4533V            1.7770V
   0.8000ns       1.8150V            2.8570V            0.8629V
   1.0000ns       1.1697V            2.3270V            0.5364V
   1.2000ns       0.7539V            1.8470V            0.4524V
   1.4000ns       0.5905V            1.5430V            0.4368V
   1.6000ns       0.4923V            1.2290V            0.4266V
   1.8000ns       0.4639V            0.9906V            0.4207V
   2.0000ns       0.4489V            0.8349V            0.4169V
| ...
  10.0000ns       0.3950V            0.4935V            0.3841V
|
|=============================================================================
|     Keyword:  [Test Data]
|    Required:  No
| Description:  Indicates the beginning of a set of Golden Waveforms and
|               references the conditions under which they were derived. An
|               IBIS file may contain any number of [Test Data] sections
|               representing different driver and load combinations.
|               Golden Waveforms are a set of waveforms simulated
|               using known ideal test loads.  They are useful in verifying
|               the accuracy of behavioral simulation results against the
|               transistor level circuit model from which the IBIS model
|               parameters originated.
|  Sub-Params:  Test_data_type, Driver_model, Driver_model_inv, Test_load
```

```
| Usage Rules:  The name following the [Test Data] keyword is required.  It
|               allows a tool to select which data to analyze.
|
|               The Test_data_type subparameter is required, and its value
|               must be either "Single_ended" or "Differential."  The value of
|               Test_data_type must match the value of Test_load_type found in
|               the load called by Test_load.
|
|               The Driver_model subparameter is required.  Its value
|               specifies the "device-under-test" and must be a valid [Model]
|               name.  Driver_model_inv is only legal if Test_data_type is
|               Differential.  Driver_model_inv is not required but may be
|               used in the case in which a differential driver uses two
|               different models for the inverting and non-inverting pins.
|
|               The Test_load subparameter is required and indicates which
|               [Test Load] was used to derive the Golden Waveforms. It must
|               reference a valid [Test Load] name.
|-------------------------------------------------------------------------
[Test Data] Data1
Test_data_type Single_ended
Driver_model Buffer1
Test_load Load1
|
|=========================================================================
|    Keywords:  [Rising Waveform Near], [Falling Waveform Near],
|               [Rising Waveform Far], [Falling Waveform Far],
|               [Diff Rising Waveform Near], [Diff Falling Waveform Near],
|               [Diff Rising Waveform Far], [Diff Falling Waveform Far]
|    Required:  At least one Rising/Falling waveform is required under the
|               scope of the [Test Data] keyword.
| Description:  Describes the shape of the rising and falling Golden Waveforms
|               of a given driver and a given [Test Load] measured at the
|               driver I/O pad (near) or receiver I/O pad (far).  A model
|               developer may use the [Rising Waveform Near/Far] and [Falling
|               Waveform Near/Far] keywords to document Golden Waveforms whose
|               purpose is to facilitate the correlation of reference
|               waveforms and behavioral simulations.
| Usage Rules:  The process, temperature, and voltage conditions under which
|               the Golden Waveforms are generated must be identical to those
|               used to generate the I-V and V-T tables. The Golden Waveforms
|               must be generated using unpackaged driver and receiver models.
|               The simulator must NOT use the Golden Waveform tables in the
|               construction of its internal stimulus function.
|
|               The tables must conform to the format described under the
|               [Rising Waveform] and [Falling Waveform] keywords.
|
|               Both differential and single-ended waveforms are allowed
|               regardless of the value of Test_data_type.  If Test_data_type
|               is Single_ended then differential waveforms will be ignored.
|               If Test_data_type is Differential, a single-ended waveform
|               refers to the model specified by Driver_model and the
|               non-inverting driver output.
|-------------------------------------------------------------------------
```

```
[Rising Waveform Far]
| Time            V(typ)              V(min)              V(max)
   0.0000s       25.2100mV           15.2200mV           43.5700mV
   0.2000ns       2.3325mV           -8.5090mV           23.4150mV
   0.4000ns       0.1484V            15.9375mV            0.3944V
   0.6000ns       0.7799V             0.2673V             1.3400V
   0.8000ns       1.2960V             0.6042V             1.9490V
   1.0000ns       1.6603V             0.9256V             2.4233V
   1.2000ns       1.9460V             1.2050V             2.8130V
   1.4000ns       2.1285V             1.3725V             3.0095V
   1.6000ns       2.3415V             1.5560V             3.1265V
   1.8000ns       2.5135V             1.7015V             3.1600V
   2.0000ns       2.6460V             1.8085V             3.1695V
| ...
  10.0000ns       2.7780V             2.3600V             3.1670V
|
[Falling Waveform Far]
| Time            V(typ)              V(min)              V(max)
   0.0000s        5.0000V             4.5000V             5.5000V
   0.2000ns       4.7470V             4.4695V             4.8815V
   0.4000ns       3.9030V             4.0955V             3.5355V
   0.6000ns       2.7313V             3.4533V             1.7770V
   0.8000ns       1.8150V             2.8570V             0.8629V
   1.0000ns       1.1697V             2.3270V             0.5364V
   1.2000ns       0.7539V             1.8470V             0.4524V
   1.4000ns       0.5905V             1.5430V             0.4368V
   1.6000ns       0.4923V             1.2290V             0.4266V
   1.8000ns       0.4639V             0.9906V             0.4207V
   2.0000ns       0.4489V             0.8349V             0.4169V
| ...
  10.0000ns       0.3950V             0.4935V             0.3841V
|
|=============================================================================
|     Keyword:  [Test Load]
|    Required:  No
| Description:  Defines a generic test load network and its associated
|               electrical parameters for reference by Golden Waveforms
|               under the [Test Data] keyword.  The Golden Waveform
|               tables correspond to a given [Test Load] which is specified
|               by the Test_load subparameter under the [Test Data] keyword.
|  Sub-Params:  Test_load_type, C1_near, Rs_near, Ls_near, C2_near, Rp1_near,
|               Rp2_near, Td, Zo, Rp1_far, Rp2_far, C2_far, Ls_far, Rs_far,
|               C1_far, V_term1, V_term2, Receiver_model, Receiver_model_inv,
|               R_diff_near, R_diff_far.
| Usage Rules:  The Test_load_type subparameter is required, and its value
|               must be either "Single_ended" or "Differential."
|
|               The subparameters specify the electrical parameters
|               associated with a fixed generic test load.  The diagram
|               below describes the single_ended test load.
|
|               All subparameters except Test_load_type are optional.  If
|               omitted, series elements are shorted and shunt elements are
|               opened by default.
|
|
```

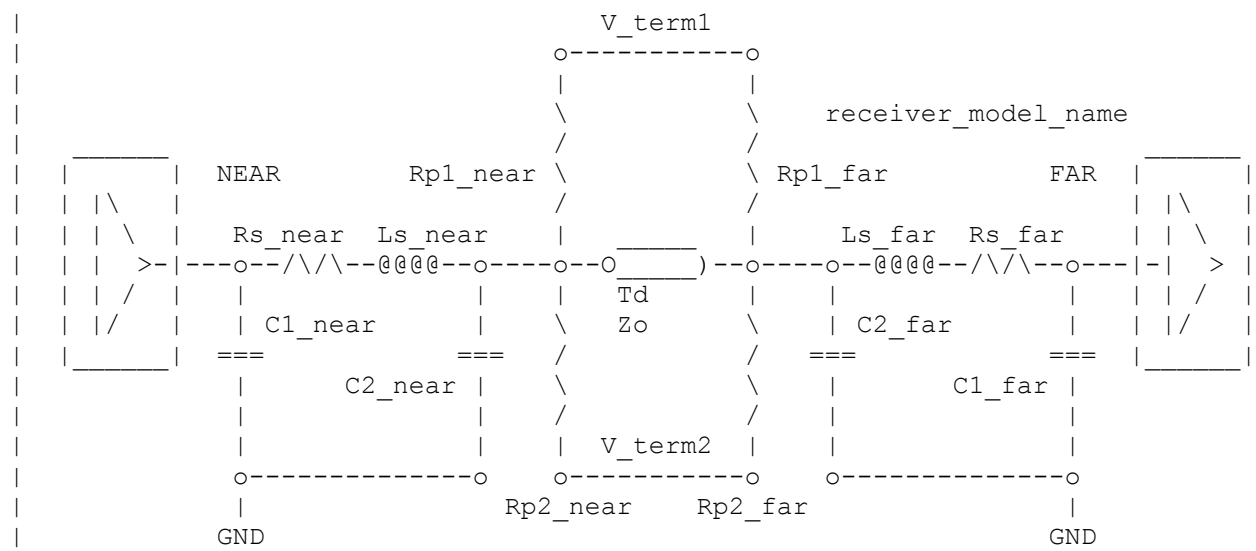

If the Td subparameter is present, then the Zo subparameter must also be present. If the Td subparameter is not present, then the simulator must remove the transmission line from the network and short the two nodes to which it was connected.

V_term1 defines the termination voltage for parallel termination resistors Rp1_near and Rp1_far. This voltage is not related to the [Voltage Range] keyword. If either Rp1_near or Rp1_far is used, then V_term1 must also be used.

V_term2 defines the termination voltage for parallel termination resistors Rp2_near and Rp2_far. If either Rp2_near or Rp2_far is used, then V_term2 must also be used.

Receiver_model is optional and indicates which, if any, receiver is connected to the far end node. If not used, the network defaults to no receiver.

Receiver_model_inv is not required but may be used in the case in which a differential receiver uses two different models for the inverting and non-inverting pins. Receiver_model_inv is ignored if Test_load_type is Single-ended.

If Test_load_type is Differential, then the test load is a pair of the above circuits. If the R_diff_near or R_diff_far subparameter is used, a resistor is connected between the near or far nodes of the two circuits. If Test_load_type is Single_ended, R_diff_near and R_diff_far are ignored.

```
[Test Load] Load1
Test_load_type Single_ended
C1_near     = 1p
Rs_near     = 10
Ls_near     = 1n
C2_near     = 1p
Rp1_near    = 100
Rp2_near    = 100
Td          = 1ns
Zo          = 50
Rp1_far     = 100
Rp2_far     = 100
C2_far      = 1p
Ls_far      = 1n
Rs_far      = 10
C1_far      = 1p
R_diff_far  = 100
Receiver_model Input1
| variable      typ             min             max
|
V_term1          1.5             1.4             1.6
V_term2          0.0             0.0             0.0
|
| Example of a transmission line and receiver test load
|
[Test Load] Tline_rcv
Td          = 1n
Zo          = 50
Receiver_model Input1
|
|================================================================================
```

|==========
|==========
|

Section 6a

|
| A D D S U B M O D E L D E S C R I P T I O N
|
|==========
|==========
|
| The [Add Submodel] keyword can be used under a top-level [Model] keyword to
| to add special-purpose functionality to the existing top-level model. This
| section describes the structure of the top-level model and the submodel.
|
| TOP-LEVEL MODEL:
|
| When special-purpose functional detail is needed, the top-level model can
| call one or more submodels. The [Add Submodel] keyword is positioned
| after the initial set of required and optional subparameters of the [Model]
| keyword and among the keywords under [Model].
|
| The [Add Submodel] keyword lists of name of each submodel and the permitted
| mode (Driving, Non-Driving or All) under which each added submodel is used.
|
| SUBMODEL:
|
| A submodel is defined using the [Submodel] keyword. It contains a subset
| of keywords and subparameters used for the [Model] keyword along with other
| keywords and subparameters that are needed for the added functionality.
|
| The [Submodel] and [Submodel Spec] keywords are defined first since they
| are used for all submodels.
|
| The only required subparameter in [Submodel] is Submodel_type to define the
| list of submodel types. No subparameters under [Model] are permitted under
| the [Submodel] keyword.
|
| The following set of keywords that are defined under the [Model] keyword are
| supported by the [Submodel] keyword:
|
| [Pulldown]
| [Pullup]
| [GND Clamp]
| [POWER Clamp]
| [Ramp]
| [Rising Waveform]
| [Falling Waveform]
|
| The [Voltage Range], [Pullup Reference], [Pulldown Reference], [GND Clamp
| Reference], and [POWER Clamp Reference] keywords are not permitted. The
| voltage settings are inherited from the top-level model.
|
| These additional keywords are used only for the [Submodel] are documented
| in this section:
|

| [Submodel Spec]
| [GND Pulse Table]
| [POWER Pulse Table]
|
| The application of these keywords depends upon the Submodel_type entries
| listed below:
|
| Dynamic_clamp
| Bus_hold
| Fall_back
|
| Permitted keywords that are not defined for any of these submodel types are
| ignored. The rules for what set of keywords are required are found under
| the Dynamic Clamp, Bus Hold, and Fall Back headings of this section.
|
|===
| **Keyword: [Submodel]**
| Required: No
| Description: Used to define a submodel, and its attributes.
| Sub-Params: Submodel_type
| Usage Rules: Each submodel must begin with the keyword [Submodel]. The
| submodel name must match the one that is listed under an
| [Add Submodel] keyword and must not contain more than 20
| characters. A .ibs file must contain enough [Submodel]
| keywords to cover all of the model names specified under the
| [Add Submodel] keyword.
|
| Submodel_type subparameter is required and must be one of the
| following:
|
| Dynamic_clamp, Bus_hold, Fall_back
|
| The C_comp subparameter is not permitted under the [Submodel]
| keyword. The total effective die capacitance including the
| submodel contributions are provided in the top-level model.
|
| Other Notes: The following list of keywords that are defined under the
| [Model] keyword can be used under [Submodel]: [Pulldown],
| [Pullup], [GND Clamp], [POWER Clamp], [Ramp], [Rising
| Waveform], and [Falling Waveform].
|
| The following list of additional keywords can be used:
| [Submodel Spec], [GND Pulse Table], and [POWER Pulse Table].
|---
[Submodel]   Dynamic_clamp1
Submodel_type   Dynamic_clamp
|
|===
| **Keyword: [Submodel Spec]**
| Required: No
| Description: The [Submodel Spec] keyword defines four columns under which
| specification and information subparameters are defined for
| submodels.
| Sub-Params: V_trigger_r, V_trigger_f, Off_delay

```
| Usage Rules:  The [Submodel Spec] is to be used only with submodels.
|
|               The following subparameters are used:
|                 V_trigger_r          Rising edge trigger voltage
|                 V_trigger_f          Falling edge trigger voltage
|                 Off_delay            Turn-off delay from V_trigger_r or
|                                      V_trigger_f
|
|               For each subparameter contained in the first column, the
|               remaining three hold its typical, minimum and maximum values.
|               The entries of typical, minimum and maximum be must be placed
|               on a single line and must be separated by at least one white
|               space.  All four columns are required under the [Submodel
|               Spec] keyword.  However, data is required only in the typical
|               column.  If minimum and/or maximum values are not available,
|               the reserved word "NA" must be used to indicate the typical
|               value by default.
|
|               The values in the minimum and maximum columns usually
|               correspond to the values in the same columns for the inherited
|               top-level voltage range or reference voltages in the top-level
|               model.  The V_trigger_r and V_trigger_f subparameters should
|               hold values in the minimum and maximum columns that correspond
|               to the voltage range or reference voltages of the top-level
|               model.  The Off_delay subparameter, however, is an exception
|               to this rule because in some cases it may be completely or
|               or partially independent from supply voltages and/or
|               manufacturing process variations.  Therefore the minimum and
|               maximum entries for the Off_delay subparameter should be
|               ordered simply by their magnitude.
|
|               Unless noted, each [Submodel Spec] subparameter is independent
|               of any other subparameter.
|
|               V_trigger_r, V_trigger_f rules:
|
|               The voltage trigger values for the rising and falling edges
|               provide the starting time when an action is initiated.
|
|               Off_delay rules:
|
|               The functionality of the Off_delay subparameter is to provide
|               an additional time related mechanism to turn off circuit
|               elements.
|
|-------------------------------------------------------------------------------
| Dynamic Clamp Example:
|
[Submodel Spec]
|   Subparameter          typ        min        max
|
V_trigger_r               3.6        2.9        4.3 | Starts power pulse table
V_trigger_f               1.4        1.2        1.6 | Starts gnd pulse table
|
```

```
| Bus Hold Example:
|
[Submodel Spec]
|   Subparameter          typ        min        max
V_trigger_r               3.1        2.4        3.7 | Starts low to high
                                                    | bus hold transition
V_trigger_f               1.8        1.6        2.0 | Starts high to low
                                                    | bus hold transition
|
| Bus_hold application with pullup structure triggered on and then clocked off:
|
[Submodel Spec]
|   Subparameter          typ        min        max
V_trigger_r               3.1        2.4        3.7 | Low to high transition
                                                    | triggers the turn on
                                                    | process of the pullup
V_trigger_f            -10.0      -10.0      -10.0 | Not used, so trigger
                                                    | voltages are set out
                                                    | of range
Off_delay                 5n         4n         6n  | Time from rising edge
                                                    | trigger at which the
                                                    | pullup turned off
|
|=============================================================================
|
| Dynamic Clamp:
|
| When the Submodel_type subparameter under the [Submodel] keyword is set to
| Dynamic_clamp, the submodel describes the dynamic clamp functionality.
|
| The [GND Pulse Table] and [POWER Pulse Table] keywords are defined.  An
| example for a complete dynamic clamp model is provided.
|
|=============================================================================
|    Keywords:  [GND Pulse Table], [POWER Pulse Table]
|    Required:  No
| Description:  Used to specify the offset voltage versus time of [GND Clamp]
|               and [POWER Clamp] tables within submodels.
| Usage Rules:  Each [GND Pulse Table] and [POWER Pulse Table] keyword
|               introduces a table of voltage vs. time points that describe
|               the shape of an offset voltage from the [GND Clamp Reference]
|               voltage (or default ground) or the [POWER Clamp Reference]
|               voltage (or default [Voltage Range] voltage).  Note, these
|               voltage values are inherited from the top-level model.
|
|               The table itself consists of one column of time points, then
|               three columns of voltage points in the standard typ, min, and
|               max format.  The four entries must be placed on a single line
|               and must be separated by at least one white space.  All four
|               columns are required.  However, data is only required in the
|               typical column.  If minimum or maximum data is not available,
|               use the reserved word "NA".  Time values must increase as one
|               parses down the table.  The waveform table can contain of
|               maximum of 100 rows.
|
|               Each table must contain at least two entries.  Thus, numerical
|               values are required for the first and last entries of any
```

column containing numerical data.

The voltage entries in both the [Gnd Pulse Table] and [POWER Pulse Table] tables are directly measured offsets. At each instance, the [Gnd Pulse Table] voltage is ADDED to the [GND Clamp] table voltages to provide the shifted table voltages. At each instance, the [POWER Pulse Table] voltage is SUBTRACTED (because of polarity conventions) from the [POWER Clamp] table voltages to provide the shifted table voltages.

Only one [GND Pulse Table] and one [POWER Pulse Table] are allowed per model.

The [GND Pulse Table] and [POWER Pulse Table] interact with [Submodel Spec] subparameters V_trigger_f and V_trigger_r. Several modes of operation exist based on whether a pulse table and its corresponding trigger subparameter are given. These modes are classified as triggered and static.

Triggered Mode:

For triggered mode a pulse table must exist and include the entire waveform; i.e., the first entry (or entries) in a voltage column must be equal to the last entry.

Also, a corresponding [Submodel Spec] V_trigger_* subparameter must exist. The triggered interaction is described:

The V_trigger_f subparameter under [Submodel Spec] is used to detect when the falling edge waveform at the die passes the trigger voltage. At that time the [Gnd Pulse Table] operation starts. Similarly, the V_trigger_r subparameter is used to detect when the rising edge waveform at the die passes the trigger voltage. At that time [POWER Pulse Table] operation starts. The [GND Pulse Table] dependency is shown below:

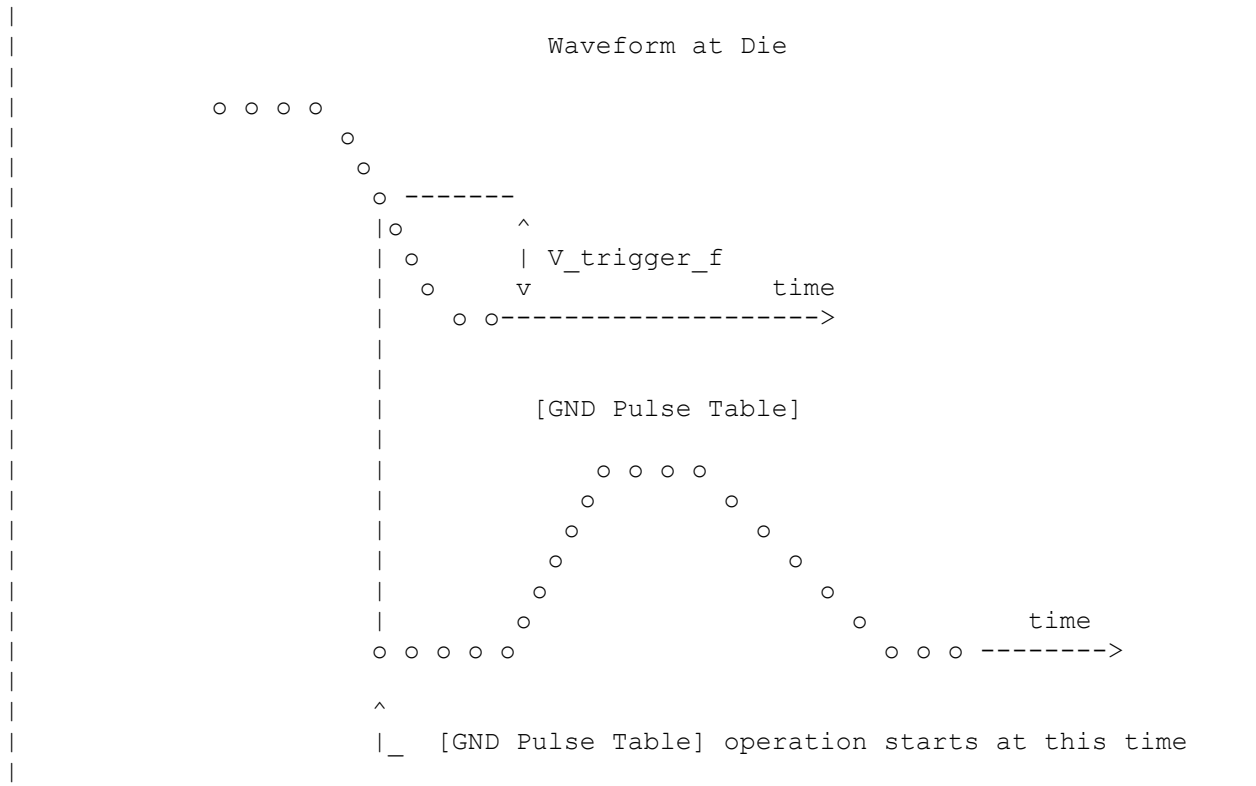

| The V_trigger_r and [POWER Pulse Table] operate in a similar manner. When the V_trigger_r voltage value is reached on the rising edge, the [POWER Pulse Table] is started. Normally the offset voltage entries in the [POWER Pulse Table] are negative.
|
| Static Mode:
|
| When the [GND Pulse Table] keyword does not exist, but the added model [GND Clamp] table does exist, the added model [GND Clamp] is used directly. Similarly, when the [POWER Pulse Table] keyword does not exist, but the added model [POWER Clamp] table does exist, the added model [POWER Clamp] is used directly.
|
| This mode provides additional fixed clamping to an I/O_* buffer or a 3-state buffer when it is used as a driver.
|---

| Example of Dynamic_clamp Model with both dynamic GND and POWER clamps:

```
[Submodel]       Dynamic_Clamp_1
Submodel_type    Dynamic_clamp
|
[Submodel Spec]
|   Subparameter          typ        min        max
|
V_trigger_f               1.4        1.2        1.6  | Falling edge trigger
V_trigger_r               3.6        2.9        4.3  | Rising edge trigger
|
|                         typ        min        max
| [Voltage Range]           5.0        4.5        5.5
```

```
| Note, the actual voltage range and reference voltages are inherited from
| the top-level model.
|
[GND Pulse Table]                                        | GND Clamp offset table
|    Time          V(typ)       V(min)        V(max)
|
       0             0            0             0
    1e-9             0            0             0
    2e-9           0.9          0.8           1.0
   10e-9           0.9          0.8           1.0
   11e-9             0            0             0
|
[GND Clamp]                                              | Table to be offset
|
|  Voltage        I(typ)       I(min)        I(max)
|
    -5.000     -3.300e+01    -3.000e+01    -3.500e+01
    -4.000     -2.300e+01    -2.200e+01    -2.400e+01
    -3.000     -1.300e+01    -1.200e+01    -1.400e+01
    -2.000     -3.000e+00    -2.300e+00    -3.700e+00
    -1.900     -2.100e+00    -1.500e+00    -2.800e+00
    -1.800     -1.300e+00    -8.600e-01    -1.900e+00
    -1.700     -6.800e-01    -4.000e-01    -1.100e+00
    -1.600     -2.800e-01    -1.800e-01    -5.100e-01
    -1.500     -1.200e-01    -9.800e-02    -1.800e-01
    -1.400     -7.500e-02    -7.100e-02    -8.300e-02
    -1.300     -5.750e-02    -5.700e-02    -5.900e-02
    -1.200     -4.600e-02    -4.650e-02    -4.550e-02
    -1.100     -3.550e-02    -3.700e-02    -3.450e-02
    -1.000     -2.650e-02    -2.850e-02    -2.500e-02
    -0.900     -1.850e-02    -2.100e-02    -1.650e-02
    -0.800     -1.200e-02    -1.400e-02    -9.750e-03
    -0.700     -6.700e-03    -8.800e-03    -4.700e-03
    -0.600     -3.000e-03    -4.650e-03    -1.600e-03
    -0.500     -9.450e-04    -1.950e-03    -3.650e-04
    -0.400     -5.700e-05    -2.700e-04    -5.550e-06
    -0.300     -1.200e-06    -1.200e-05    -5.500e-08
    -0.200     -3.000e-08    -5.000e-07     0.000e+00
    -0.100      0.000e+00     0.000e+00     0.000e+00
     0.000      0.000e+00     0.000e+00     0.000e+00
     5.000      0.000e+00     0.000e+00     0.000e+00
|
[POWER Pulse Table]                                      | POWER Clamp offset table
|
|    Time          V(typ)       V(min)        V(max)
|
       0             0            0             0
    1e-9             0            0             0
    2e-9          -0.9         -1.0          -0.8
   10e-9          -0.9         -1.0          -0.8
   11e-9             0            0             0
|
```

```
[POWER Clamp]                                        | Table to be offset
|
|  Voltage        I(typ)        I(min)        I(max)
|
    -5.000      1.150e+01     1.100e+01     1.150e+01
    -4.000      7.800e+00     7.500e+00     8.150e+00
    -3.000      4.350e+00     4.100e+00     4.700e+00
    -2.000      1.100e+00     8.750e-01     1.300e+00
    -1.900      8.000e-01     6.050e-01     1.000e+00
    -1.800      5.300e-01     3.700e-01     7.250e-01
    -1.700      2.900e-01     1.800e-01     4.500e-01
    -1.600      1.200e-01     6.850e-02     2.200e-01
    -1.500      3.650e-02     2.400e-02     6.900e-02
    -1.400      1.200e-02     1.100e-02     1.600e-02
    -1.300      6.300e-03     6.650e-03     6.100e-03
    -1.200      4.200e-03     4.750e-03     3.650e-03
    -1.100      2.900e-03     3.500e-03     2.350e-03
    -1.000      1.900e-03     2.450e-03     1.400e-03
    -0.900      1.150e-03     1.600e-03     7.100e-04
    -0.800      5.500e-04     9.150e-04     2.600e-04
    -0.700      1.200e-04     4.400e-04     5.600e-05
    -0.600      5.400e-05     1.550e-04     1.200e-05
    -0.500      1.350e-05     5.400e-05     1.300e-06
    -0.400      8.650e-07     7.450e-06     4.950e-08
    -0.300      6.250e-08     7.550e-07     0.000e+00
    -0.200      0.000e+00     8.400e-08     0.000e+00
    -0.100      0.000e+00     0.000e-08     0.000e+00
     0.000      0.000e+00     0.000e+00     0.000e+00
|
|
|================================================================================
|================================================================================
|
| Bus Hold:
|
| When the Submodel_type subparameter under the [Submodel] keyword is set to
| Bus_hold, the added model describes the bus hold functionality.  However,
| while described in terms of bus hold functionality, active terminators
| can also be modeled.
|
| Existing keywords and subparameters are used to describe bus hold models.
| The [Pullup] and [Pulldown] tables both are used to define an internal
| buffer that is triggered to switch to its opposite state.  This switching
| transition is specified by a [Ramp] keyword or by the [Rising Waveform] and
| [Falling Waveform] keywords.  The usage rules for these keywords are the
| same as under the [Model] keyword.  In particular, at least either the
| [Pullup] or [Pulldown] keyword is required.  Also, the [Ramp] keyword is
| required, even if the [Rising Waveform] and [Falling Waveform] tables exist.
| However, the voltage ranges and reference voltages are inherited from the
| top-level model.
|
| For bus hold submodels, the [Submodel Spec] keyword, V_trigger_r, and
| V_trigger_f are required.  The Off_delay subparameter is optional, and can
| only be used if the submodel consists of a pullup or a pulldown structure
| only, and not both.  Devices which have both pullup and pulldown structures
| controlled in this fashion can be modeled using two submodels, one for each
| half of the circuit.
```

| The transition is triggered by action at the die using the [Submodel Spec]
| V_trigger_r and V_trigger_f subparameters is described next. In all
| subsequent discussions, "low" means the pulldown structure is on or active,
| and the pullup structure is off or inactive if either or both exist. The
| opposite settings are referred to as "high".
|
| If the starting voltage is below V_trigger_f, then the bus hold model is set
| to the low state causing additional pulldown current. If the starting
| voltage is above V_trigger_r, the bus hold model is set to the high state
| for additional pullup current.
|
| Under some unusual cases, the above conditions can be both met or not met at
| all. To resolve this, the EDA tool should compute the starting voltage with
| the bus hold model set to low. If the starting voltage is equal to or less
| than the average of V_trigger_r and V_trigger_f, keep the bus hold model
| in the low state. Otherwise, set the bus hold model to the high state.
|
| When the input passes through V_trigger_f during a high-to-low transition
| at the die, the bus hold output switches to the low state. Similarly, when
| the input passes though V_trigger_r during a low-to-high transition at the
| die, the bus hold output switches to the high state.
|
| If the bus hold submodel has a pullup structure only, V_trigger_r provides
| the time when its pullup is turned on and V_trigger_f or Off_delay provides
| the time when it is turned off, whichever occurs first. Similarly, if the
| submodel has a pulldown structure only, V_trigger_f provides the time when
| its pulldown is turned on and V_trigger_r or Off_delay provides the time
| when it is turned off, whichever occurs first. The required V_trigger_r
| and V_trigger_f voltage entries can be set to values outside of the input
| signal range if the pullup or pulldown structures are to be held on until
| the Off_delay turns them off.
|
| The starting mode for each of the submodels which include the Off_delay
| subparameter of the [Submodel Spec] keyword is the off state. Also, while
| two submodels provide the desired operation, either of the submodels may
| exist without the other to simulate turning on and off only a pullup or a
| pulldown current.
|
| The following tables summarizes the bus hold initial and switching
| transitions:
|
| BUS HOLD WITHOUT OFF_DELAY:
|
| Initialization:
|
| Initial Vdie Value   Initial Bus Hold
| Submodel State
| -------------------------------- ----------------
| <= V_trigger_r & < V_trigger_f   low
| => V_trigger_f & > V_trigger_r   high
|
| <= (V_trigger_f + V_trigger_r)/2 low | Recommendations if neither
| > (V_trigger_f + V_trigger_r)/2   high | or both conditions above
| | are satisfied
|
|

```
|     Transitions:
|
|       Prior Bus Hold    Vdie transition  Bus Hold
|       Submodel State    through          Transition
|                         V_trigger_r/f
|       --------------    ---------------  -----------
|       low               V_trigger_r      low-to-high
|       low               V_trigger_f      no change
|       high              V_trigger_r      no change
|       high              V_trigger_f      high-to-low
|
|   BUS HOLD WITH OFF_DELAY (REQUIRES EITHER [PULLUP] or [PULLDOWN] ONLY):
|
|     Initialization:
|
|       [Pullup] or       Initial Bus Hold
|       [Pulldown] Table  Submodel State (Off Mode)
|       ----------------  ------------------------
|       [Pullup]          low
|       [Pulldown]        high
|
|     Transitions:
|
|       Prior Bus Hold    Vdie transition  Bus Hold      Off_delay
|       Submodel State    through          Transition    Transition
|                         V_trigger_r/f
|       --------------    ---------------  -----------   -----------
|       low               V_trigger_r      low-to-high   high-to-low
|       low               V_trigger_f      no change     no change
|       high              V_trigger_r      no change     no change
|       high              V_trigger_f      high-to-low   low-to-high
|
|     Note, if Vdie passes again through the V_trigger_r/f thresholds
|     before the Off_delay time is reached, the bus hold state follows the
|     change documented in the first table, overriding the Off_delay
|     transition.
|
| No additional keywords are needed for this functionality.
|-------------------------------------------------------------------------------
|
| Complete Bus Hold Model Example:
|
[Submodel]       Bus_hold_1
Submodel_type    Bus_hold
|
[Submodel Spec]
|   Subparameter          typ        min        max
|
V_trigger_f              1.3        1.2        1.4  | Falling edge trigger
V_trigger_r              3.1        2.6        4.6  | Rising edge trigger
|
|                         typ        min        max
| [Voltage Range]           5.0        4.5        5.5
| Note, the actual voltage range and reference voltages are inherited from
| the top-level model.
|
```

```
[Pulldown]
|
-5V     -100uA      -80uA      -120uA
-1V     -30uA       -25uA      -40uA
0V       0            0          0
1V       30uA        25uA       40uA
3V       50uA        45uA       50uA
5V       100uA       80uA       120uA
10v      120uA       90uA       150uA
|
[Pullup]
|
-5V      100uA       80uA       120uA
-1V      30uA        25uA       40uA
0V       0            0          0
1V      -30uA       -25uA      -40uA
3V      -50uA       -45uA      -50uA
5V      -100uA      -80uA      -120uA
10v     -120uA      -90uA      -150uA
|
|-------------------------------------------------------------------------------
|
[Ramp]
|                       typ              min              max
dV/dt_r                 2.0/0.50n        2.0/0.75n        2.0/0.35n
dV/dt_f                 2.0/0.50n        2.0/0.75n        2.0/0.35n
R_load = 500
|
|-------------------------------------------------------------------------------
|
| Complete Pulldown Timed Latch Example:
|
[Submodel]       Timed_pulldown_latch
Submodel_type    Bus_hold
|
[Submodel Spec]
|   Subparameter          typ        min        max
|
V_trigger_r               3.1        2.6        4.6  | Rising edge trigger
                                                     | Values could be set out
                                                     | of range to disable the
                                                     | trigger
V_trigger_f               1.3        1.2        1.4  | Falling edge trigger



Off_delay                 3n         2n         5n   | Delay to turn off the
                                                     | pulldown table
|
| Note that if the input signal goes above the V_trigger_r value, the
| pulldown structure will turn off even if the timer didn't expire yet.
|
|                         typ        min        max
| [Voltage Range]         5.0        4.5        5.5
| Note, the actual voltage range and reference voltages are inherited from
| the top-level model.
|
```

```
[Pulldown]
|
-5V     -100uA      -80uA      -120uA
-1V      -30uA      -25uA      -40uA
0V       0            0          0
1V       30uA        25uA      40uA
3V       50uA        45uA      50uA
5V       100uA       80uA      120uA
10v      120uA       90uA     150uA
|
| [Pullup] table is omitted to signal Open_drain functionality.
|
|------------------------------------------------------------------------------
|
[Ramp]
|                        typ              min              max
dV/dt_r                  2.0/0.50n        2.0/0.75n        2.0/0.35n
dV/dt_f                  2.0/0.50n        2.0/0.75n        2.0/0.35n
R_load = 500
|
|==============================================================================
|
| Fall Back:
|
| When the Submodel_type subparameter under the [Submodel] keyword is set to
| Fall_back, the added model describes the fall back functionality.  This
| submodel can be used to model drivers that reduce their strengths and
| increase their output impedances during their transitions.  The fall back
| submodel is specified in a restrictive manner consistent with its intended
| use with a driver model operating only in Driving mode.  In a Non-Driving
| mode, no action is specified.  For example, a fall back submodel added to
| and Input or Terminator model would be inactive.
|
| Existing keywords and subparameters are used to describe fall back models.
| However, only one [Pullup] or [Pulldown] table, but not both, is allowed.
| The switching transition is specified by a [Ramp] keyword or by the [Rising
| Waveform] and [Falling Waveform] keywords.  The [Ramp] keyword is required,
| even if the [Rising Waveform] and [Falling Waveform] tables exist.  However,
| the voltage ranges and reference voltages are inherited from the top-level
| model.
|
| For fall back submodels, the [Submodel Spec] keyword, V_trigger_r, and
| V_trigger_f are required.  Unlike the bus hold model, the Off_delay
| subparameter is not permitted.  Devices which have both pullup and pulldown
| structures can be modeled using two submodels, one for the rising cycle
| and one for the falling cycle.
|
| In all following discussion, "low" means the pulldown structure is on or
| active, and the pullup structure is off or inactive.  The opposite settings
| are referred to as "high".
|
| The transition is triggered by action at the die using the [Submodel Spec]
| V_trigger_r and V_trigger_f subparameters.  The initialization and
| transitions are set as follows:
|
```

| INITIAL STATE:
|
[Pullup] or [Pulldown] Table	Initial Fall Back Submodel State (Off Mode)
[Pullup]	low
[Pulldown]	high
DRIVER RISING CYCLE:

Prior State	Vdie	Rising Edge Transition	Vdie > V_trigger_r Transition
low	<= V_trigger_r	low-to-high	high-to-low
	> V_trigger_r	stays low	stays low
high	<= V_trigger_r	stays high	high-to-low
	> V_trigger_r	stays high	stays high

| DRIVER FALLING CYCLE:
|

Prior State	Vdie	Falling Edge Transition	Vdie < V_trigger_f Transition
high	=> V_trigger_f	high-to-low	low-to-high
	< V_trigger_f	stays high	stays high
low	=> V_trigger_f	stays low	low-to-high
	< V_trigger_f	stays low	stays low

|
| One application is to configure the submodel with only a pullup structure.
| At the beginning of the rising edge cycle, the pullup is turned on to the
| high state. When the die voltage passes V_trigger_r, the pullup structure
| is turned off. Because only the pullup structure is used, the off state is
| low corresponding to a high-Z state. During the falling transition, the
| pullup remains in the high-Z state if the V_trigger_f is set out of range to
| avoid setting the submodel to the high state. So a temporary boost in drive
| occurs only during the first part of the rising cycle.
|
| A similar submodel consisting of only a pulldown structure could be
| constructed to provide added drive strength only at the beginning of the
| falling cycle. The complete IBIS model would have both submodels to give
| added drive strength for both the start of the rising and the start of the
| falling cycles.
|
| No additional keywords are needed for this functionality.
|---
|

```
| Complete Dynamic Output Model Example Using Two Submodels:
|
[Submodel]       Dynamic_Output_r
Submodel_type    Fall_back
|
[Submodel Spec]
|   Subparameter          typ        min        max
|
V_trigger_f             -10.0      -10.0      -10.0  | Falling edge trigger
                                                     | set out of range to
                                                     | disable trigger
V_trigger_r               3.1        2.6        4.6  | Rising edge trigger
|
|                           typ        min        max
| [Voltage Range]           5.0        4.5        5.5
| Note, the actual voltage range and reference voltages are inherited from
| the top-level model.
|
[Pullup]
|
-5V      100mA      80mA      120mA
0V       0           0         0
10v     -200mA     -160mA    -240mA
|
| [Pulldown] table is omitted to signify Open_source functionality.
|
|------------------------------------------------------------------------------
|
[Ramp]
|                       typ             min             max
dV/dt_r                 1.5/0.50n       1.43/0.75n      1.58/0.35n
dV/dt_f                 1.5/0.50n       1.43/0.75n      1.58/0.35n
R_load = 50
|
|------------------------------------------------------------------------------
|
[Submodel]       Dynamic_Output_f
Submodel_type    Fall_back
|
[Submodel Spec]
|   Subparameter          typ        min        max
|
V_trigger_r               10.0       10.0       10.0 | Rising edge trigger
                                                     | set out of range to
                                                     | disable trigger
V_trigger_f               1.3        1.2        1.4  | Falling edge trigger
|
|                           typ        min        max
| [Voltage Range]           5.0        4.5        5.5
| Note, the actual voltage range and reference voltages are inherited from
| the top-level model.
|
```

```
[Pulldown]
|
-5V     -100mA      -80mA      -120mA
0V       0           0          0
10v      200mA       160mA      240mA
|
| [Pullup] table is omitted to signify Open_drain functionality.
|
|------------------------------------------------------------------------------
|
[Ramp]
|                       typ             min             max
dV/dt_r                 1.5/0.50n       1.43/0.75n      1.58/0.35n
dV/dt_f                 1.5/0.50n       1.43/0.75n      1.58/0.35n
R_load = 50
|
|==============================================================================
```

Section 6b

M U L T I - L I N G U A L M O D E L E X T E N S I O N S

INTRODUCTION:

The SPICE, VHDL-AMS and Verilog-AMS languages are supported by IBIS. This chapter describes how models written in these languages can be referenced and used by IBIS files.

The language extensions use the following keywords within the IBIS framework:

[External Circuit] [End External Circuit]	- References enhanced descriptions of structures on the die, including digital and/or analog, active and/or passive circuits
[External Model] [End External Model]	- Same as [External Circuit], except limited to the connection format and usage of the [Model] keyword, with one additional feature added: support for true differential buffers
[Node Declarations] [End Node Declarations]	- Lists on-die connection points related to the [Circuit Call] keyword
[Circuit Call] [End Circuit Call]	- Instantiates [External Circuit]s and connects them to each other and/or die pads

The placement of these keywords within the hierarchy of IBIS is shown in the following diagram:

```
|-- [Component]
|   | ...
|   |-- [Node Declarations]
|   |-- [End Node Declarations]
|   | ...
|   | ...
|   |-- [Circuit Call]
|   |-- [End Circuit Call]
|   | ...
| ...
|-- [Model]
|   | ...
|   |-- [External Model]
|   |-- [End External Model]
|   | ...
| ...
|-- [External Circuit]
|-- [End External Circuit]
| ...
```

Figure 1

| LANGUAGES SUPPORTED:
|
| IBIS files can reference other files which are written using the SPICE,
| VHDL-AMS, or Verilog-AMS languages. In this document, these languages are
| defined as follows:
|
| "SPICE" refers to SPICE 3, Version 3F5 developed by the University of
| California at Berkeley, California. Many vendor-specific EDA tools are
| compatible with most or all of this version.
|
| "VHDL-AMS" refers to "IEEE Standard VHDL Analog and Mixed-Signal
| Extensions", approved March 18, 1999 by the IEEE-SA Standards Board and
| designated IEEE Std. 1076.1-1999.
|
| "Verilog-AMS" refers to the Analog and Mixed-Signal Extensions to
| Verilog-HDL as documented in the Verilog-AMS Language Reference, Version
| 2.0. This document is maintained by Accellera (formerly Open Verilog
| International), an independent organization. Verilog-AMS is a superset
| that includes Verilog-A and the Verilog Hardware Description Language
| IEEE 1364-2001.
|
| In addition the "IEEE Standard Multivalue Logic System for VHDL Model
| Interoperability (Std_logic_1164)" designated IEEE Std. 1164-1993 is
| required to promote common digital data types.
|
| Note that, for the purposes of this section, keywords, subparameters and
| other data used without reference to the external languages just described
| are referred to collectively as "native" IBIS.
|
| OVERVIEW:
|
| The four keyword pairs discussed in this chapter can be separated into two
| groups based on their functionalities. The [External Model], [End External
| Model], [External Circuit] and [End External Circuit] keywords are used as
| pointers to the models described by one of the external languages. The
| [Node Declaration], [End Node Declaration], [Circuit Call], and [End
| Circuit Call] keywords are used to describe how [External Circuit]s are
| connected to each other and/or to the die pads.
|
| The [External Model] and [External Circuit] keywords are very similar in
| that they both support the same external languages, and they can both be
| used to describe passive and/or active circuitry. The key difference
| between the two keywords is that [External Model] can only be placed under
| the [Model] keyword, while [External Circuit] can only be placed outside the
| [Model] keyword. This is illustrated in Figure 1 above.
|
| The intent behind [External Model] is to provide an upgrade path from native
| native IBIS [Model]s to the external languages (one exception to this is the
| support for true differential buffers). Thus, the [External Model] keyword
| can be used to replace the usual I-V and V-T tables, C_comp, C_comp_pullup,
| C_comp_pulldown, C_comp_power_clamp, C_comp_gnd_clamp subparameters, [Ramp],
| [Driver Schedule], [Submodel] keywords, etc. of a [Model] by any modeling
| technique that the external languages allow. For [External Model]s, the
| connectivity, test load and specification parameters (such as Vinh and Vinl)
| are preserved from the [Model] keyword and the simulator is expected to
| carry out the same type of connections and measurements as is usually done
| with the [Model] keyword. The only difference is that the model itself is

| described by an external language.
|
| In the case of the [External Circuit], however, one can model a circuit
| having any number of ports (see definitions below). For example, the ports
| may include impedance or buffer strength selection controls in addition to
| the usual signal and supply connections. The connectivity of an [External
| Circuit] is defined by the [Node Declaration] and [Circuit Call] keywords.
| Currently, the test loads and measurement parameters for an [External
| Circuit] can only be defined inside the model description itself. The
| results of measurements can be reported to the user or tool via other means.
|
| The [Circuit Call] keyword acts similarly to subcircuit calls in SPICE,
| instantiating the various [External Circuit]s and connecting them together.
| Please note that models described by the [External Model] keyword are
| connected according to the rules and assumptions of the [Model] keyword.
| [Circuit Call] is not necessary for these cases and must not be used.
|
|
| DEFINITIONS:
|
| For the purposes of this document, several general terms are defined below.
|
| circuit - any arbitrary collection of active or
| passive electrical elements treated as a unit
|
| node - any electrical connection point;
| also called die node (may be digital or
| analog; may be a connection internal to a
| circuit or between circuits)
|
| pad - a special case of a node. A pad connects
| a buffer or other circuitry to a package;
| also called die pad.
|
| port - access point in an [External Model] or
| [External Circuit] definition for digital or
| analog signals
|
| pseudo-differential circuits - combination of two single-ended circuits
| which drive and/or receive complementary
| signals, but where no internal current
| relationship exists between them
|
| true differential circuits - circuits where a current relationship exists
| between two output or inputs which drive or
| receive complementary signals
||
|
| GENERAL ASSUMPTIONS:
|
|
| Ports under [Model]s:
|
| The use of ports under native IBIS must be understood before the multi-
| lingual extensions can be correctly applied. The [Model] keyword assumes,
| but does not explicitly require naming ports on circuits. These ports are
| automatically connected by IBIS-compliant tools without action by the user.

| For example, the [Voltage Reference] keyword implies the existence of power
| supply rails which are connected to the power supply ports of the circuit
| described by the [Model] keyword.
|
| For multi-lingual modeling, ports must be explicitly named in the
| [External Model] or [External Circuit]; the ports are no longer assumed by
| EDA tools. To preserve compatibility with the assumptions of [Model], a
| list of pre-defined port names has been created where the ports are reserved
| reserved with fixed functionality. These reserved ports are defined in the
| table below.
|

Port Name	Description
1 D_drive	Digital input to a model unit
2 D_enable	Digital enable for a model unit
3 D_receive	Digital receive port of a model unit, based on data on A_signal (and/or A_signal_pos and A_signal_neg)
4 A_puref	Voltage reference port for pullup structure
5 A_pcref	Voltage reference port for power clamp structure
6 A_pdref	Voltage reference port for pulldown structure
7 A_gcref	Voltage reference port for ground clamp structure
8 A_signal	I/O signal port for a model unit
9 A_extref	External reference voltage port
10 D_switch	Digital input for control of a series switch model
11 A_gnd	Global reference voltage port
12 A_pos	Non-inverting port for series or series switch models
13 A_neg	Inverting port for series or series switch models
14 A_signal_pos	Non-inverting port of a differential model
15 A_signal_neg	Inverting port of a differential model

|
| The first letter of the port name designates it as either digital ("D") or
| analog ("A"). Reserved ports 1 through 13 listed above are assumed or
| implied under the native IBIS [Model] keyword. Again, for multi-lingual
| models, these ports must be explicitly assigned by the user in the model
| if their functions are to be used. A_gnd is a universal reference node,
| similar to SPICE ideal node "0." Ports 14 and 15 are only available
| under [External Model] for support of true differential buffers.
|
| Under the [Model] description, power and ground reference ports are created
| and connected by IBIS-compliant tools as defined by the [Power Clamp
| Reference], [GND Clamp Reference], [Pullup Reference], [Pulldown Reference]
| and/or [Voltage Range] keywords. The A_signal port is connected to the die
| pad, to drive or receive an analog signal.
|
|
| Ports under [External Model]s:
|
| The [External Model] keyword may only appear under the [Model] keyword and
| it may only use the same ports as assumed with the native IBIS [Model]
| keyword. However, [External Model] requires that reserved ports be
| explicitly declared in the referenced language(s); tools will continue to
| assume the connections to these ports.
|
| For [External Model], reserved analog ports are usually assumed to be die
| pads. These ports would be connected to the component pins through [Package
| Model]s or [Pin] parasitics. Digital ports under [External Model] would
| connect to other internal digital circuitry.

| Drawings of two standard [Model] structures -- an I/O buffer and a Series
| Switch -- are shown below, with their associated port names.
|

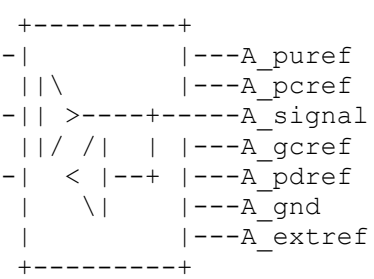

| Figure 2
|
|

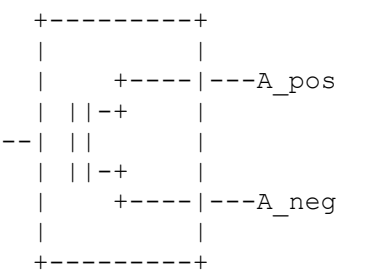

| Figure 3
|
|
| Ports under [External Circuit]s:
|
| The [External Circuit] keyword allows the user to define any number of ports
| and port functions on a circuit. The [Circuit Call] keyword instantiates
| [External Circuit]s and connects their ports to specific die nodes (this can
| include pads). In this way, the ports of an [External Circuit] declaration
| become specific component die nodes. Note that, if reserved digital port
| names are used with an [External Circuit], those ports will be connected
| automatically as defined in the port list above (under [External Circuit],
| reserved analog port names do not retain particular meanings).
|
| The diagram below illustrates the use of [External Circuit]. Buffer A is an
| instance of [External Circuit] "X". Similarly, Buffer B is an instance of
| [External Circuit] "Z". These instances are created through [Circuit
| Call]s. [External Circuit] "Y" defines an on-die interconnect circuit.
| Nodes "a" through "e" and nodes "f" through "j" are specific instances of
| the ports defined for [External Circuit]s "X" and "Z". These ports become
| the internal nodes of the die and must be explicitly declared with the
| [Node Declaration] keyword. The "On-die Interconnect" [Circuit Call]
| creates an instance of the [External Circuit] "Y" and connects the instance
| with the appropriate power, signal, and ground die pads. The "A" and "B"
| [Circuit Call]s connect the individual ports of each buffer instance to the
| "On-die Interconnect" [Circuit Call].
|
| Note that the "Analog Buffer Control" signal is connected directly to the
| pad for pin 3. This connection is also made through an entry under the
| [Circuit Call] keyword.
|

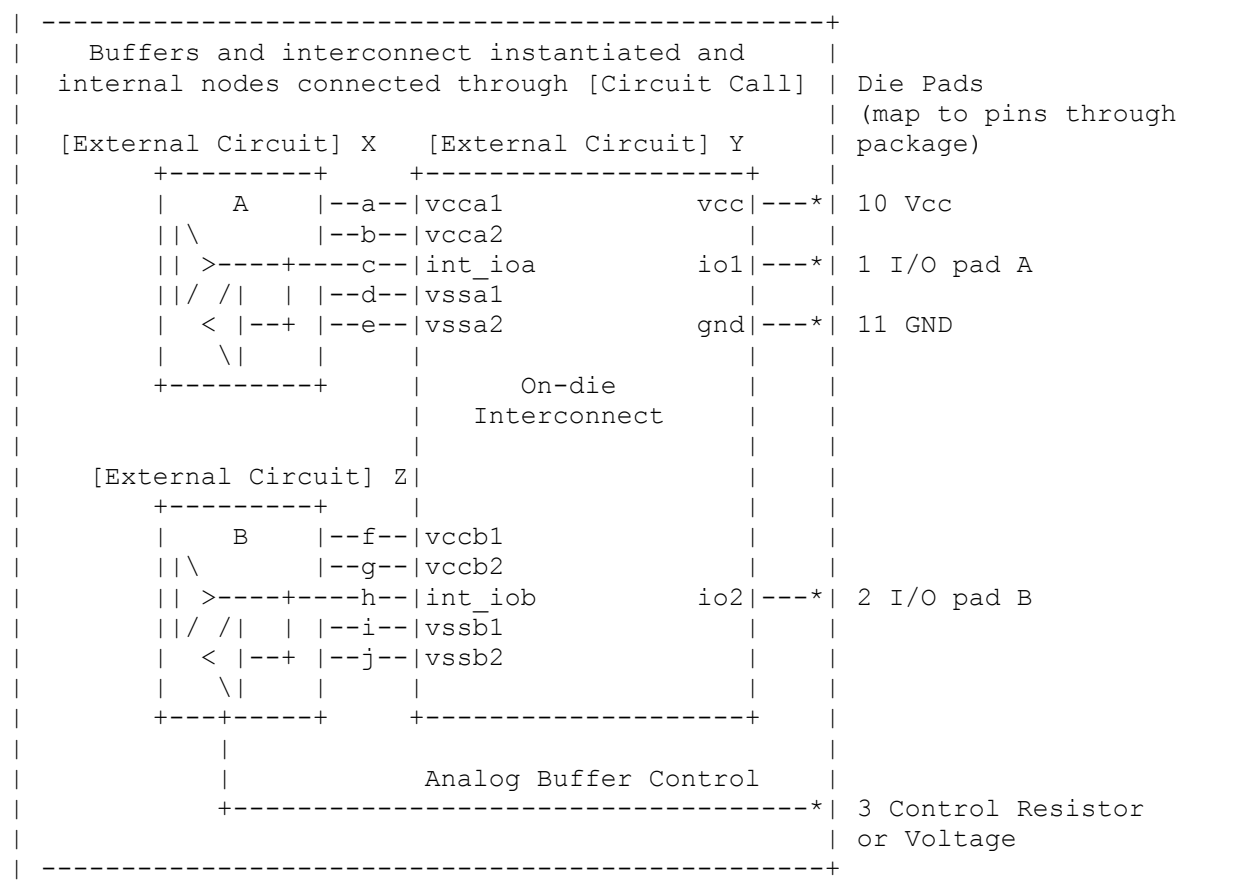

Figure 4

The [Model], [External Model] and [External Circuit] keywords (with [Circuit Call]s and [Node Declarations] as appropriate) may be combined together in the same IBIS file or even within the same [Component] description.

SPICE versus VHDL-AMS and VERILOG-AMS

The intent of native IBIS is to model the circuit block between the region where analog signals are of interest, and the digital logic domain internal to the component. (for the purposes of this discussion, the IBIS circuit block is called a "model unit" in the drawings and document text below).

The multi-lingual modeling extensions maintain and expand this approach, assuming that both digital signals and/or analog signals can move to and from the model unit. All VHDL-AMS and Verilog-AMS models, therefore must have digital ports and analog ports (in certain cases, digital ports may not be required, as in the case of interconnects; see [External Circuit] below). Routines to convert signals from one format to the other are the responsibility of the model author.

SPICE cannot process digital signals. All SPICE input and output signals must be in analog format. Consequently, IBIS multi-lingual models using SPICE require analog-to-digital (A_to_D) and/or digital-to-analog (D_to_A) converters to be provided by the EDA tool. The converter subparameters are

| declared by the user, as part of the [External Model] or [External Circuit]
| syntax, with user-defined names for the ports which connect the converters
| to the analog ports of the SPICE model. The details behind these
| declarations are explained in the keyword definitions below.
|
| To summarize, Verilog-AMS and VHDL-AMS contain all the capability needed to
| ensure that a model unit consists of only digital ports and/or analog ports.
| SPICE, however, needs extra data conversion, provided by the EDA tool, to
| ensure that any digital signals can be correctly processed.
|
|

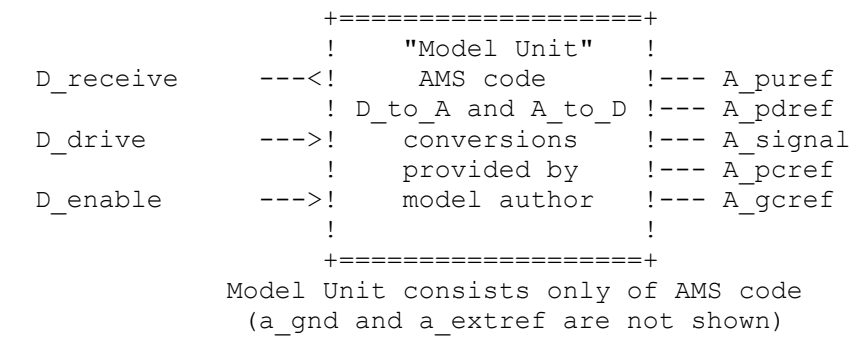

| Figure 5: AMS Model Unit, using an I/O buffer as an example
|
|

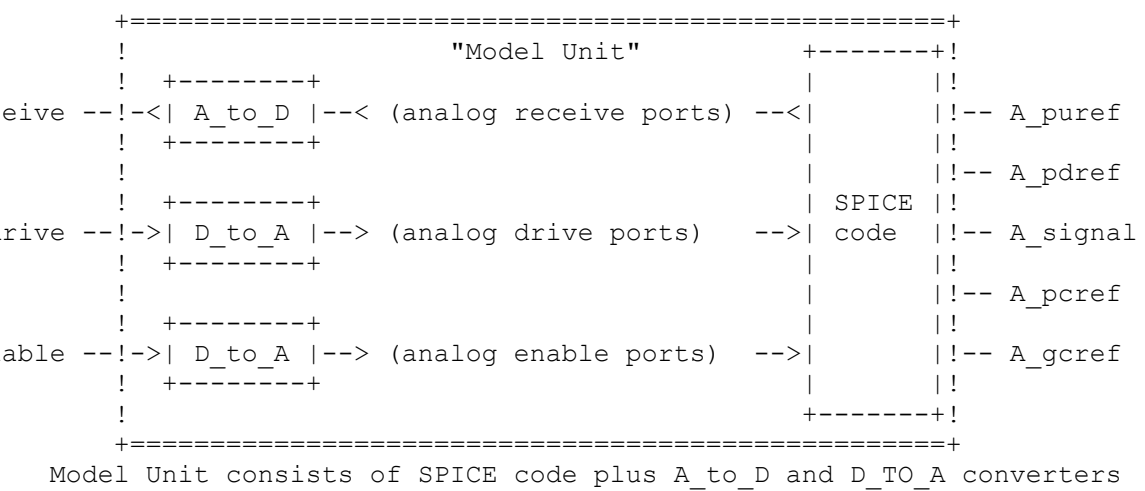

| Figure 6: SPICE Model Unit, using an I/O buffer as an example
|
|==========
|
| KEYWORD DEFINITIONS:
|
|==========

|==
| **Keywords:** **[External Model], [End External Model]**
| Required: No
| Description: Used to reference an external file written in one of the
| supported languages containing an arbitrary circuit
| definition, but having ports that are compatible with the
| [Model] keyword, or having ports that are compatible with the
| [Model] keyword plus an additional signal port for true
| differential buffers.
|
| Sub-Params: Language, Corner, Parameters, Ports, D_to_A, A_to_D
| Usage Rules: The [External Model] keyword must be positioned within a
| [Model] section and it may only appear once for each [Model]
| keyword in a .ibs file. It is not permitted under the
| [Submodel] keyword.
|
| [Circuit Call] may not be used to connect an [External Model].
|
| A native IBIS [Model]'s data may be incomplete if the [Model]
| correctly references an [External Model]. Any native IBIS
| keywords that are used in such a case must contain
| syntactically correct data and subparameters according to
| native IBIS rules. In all cases, [Model]s which reference
| [External Model]s must include the following keywords and
| subparameters:
|
| Model_type
| Vinh, Vinl (as appropriate to Model_type)
| [Voltage Range] and/or [Pullup Reference],
| [Pulldown Reference], [POWER Clamp Reference],
| [GND Clamp Reference], [External Reference]
| [Ramp]
|
| In models without the [External Model] keyword, data for
| [Ramp] should be measured using a load that conforms to the
| recommendations in Section 9: Notes on Data Derivation Method.
| However, when used within the scope of [External Model], the
| [Ramp] keyword is intended strictly to provide EDA tools with
| a quick first-order estimate of driver switching
| characteristics. When using [External Model], therefore, data
| for [Ramp] may be measured using a different load, if it
| results in data that better represent the driver's behavior in
| standard operation. Also in this case, the R_load
| subparameter is optional, regardless of its value, and will be
| ignored by EDA simulators. For example, the 20% to 80%
| voltage and time intervals for a differential buffer may be
| measured using the typical differential operating load
| appropriate to that buffer's technology. Note that voltage
| and time intervals must always be recorded explicitly rather
| than as a reduced fraction, in accordance with [Ramp] usage
| rules.
|
| The following keywords and subparameters may be omitted,
| regardless of Model_type, from a [Model] using [External
| Model]:
|

C_comp, C_comp_pullup, C_comp_pulldown, C_comp_power_clamp,
C_comp_gnd_clamp
[Pulldown], [Pullup], [POWER Clamp], [GND Clamp]

Subparameter Definitions:

Language:

Accepts "SPICE", "VHDL-AMS", or "Verilog-AMS" as arguments. The Language subparameter is required and must appear only once.

Corner:

Three entries follow the Corner subparameter on each line:

corner_name file_name circuit_name

The corner_name entry is "Typ", "Min", or "Max". The file_name entry points to the referenced file in the same directory as the .ibs file.

Up to three Corner lines are permitted. A "Typ" line is required. If "Min" and/or "Max" data is missing, the tool may use "Typ" data in its place. However, the tool should notify the user of this action.

The circuit_name entry provides the name of the circuit to be simulated within the referenced file. For SPICE files, this is normally a ".subckt" name. For VHDL-AMS files, this is normally an "entity(architecture)" name pair. For Verilog-AMS files, this is normally a "module" name.

No character limits, case-sensitivity limits or extension conventions are required or enforced for file_name and circuit_name entries. However, the total number of characters in each Corner line must comply with the rules in Section 3. Furthermore, lower-case file_name entries are recommended to avoid possible conflicts with file naming conventions under different operating systems. Case differences between otherwise identical file_name entries or circuit_name entries should be avoided. External languages may not support case-sensitive distinctions.

Parameters:

Lists names of parameters that can be passed into an external model file. Each Parameters assignment must match a name or keyword in the external file or language. The list of Parameters may span several lines by using the word Parameters at the start of each line. The Parameters subparameter is optional, and the external model must operate with default settings without any Parameters assignments.

Parameter passing is not supported in SPICE. VHDL-AMS parameters are supported using "generic" names, and Verilog-AMS parameters are supported using "parameter" names.

Ports:

Ports are interfaces to the [External Model] which are available to the user and tool at the IBIS level. They are used to connect the [External Model] to die pads. The Ports parameter is used to identify the ports of the [External Model] to the simulation tool. The port assignment is by position and the port names do not have to match exactly the names inside the external file. The list of port names may span several lines if the word Ports is used at the start of each line.

Model units under [External Model] may only use reserved ports. The reserved, pre-defined port names are listed in the General Assumptions heading above. As noted earlier, digital and analog reserved port functions will be assumed by the tool and connections made accordingly. All the ports appropriate to the particular Model_type subparameter entry must be explicitly listed (see below). Note that the user may connect SPICE models to A_to_D and D_to_A converters using custom names for analog ports within the model unit, so long as the digital ports of the converters use the digital reserved port names.

The rules for pad connections with [External Model] are identical to those for [Model]. The [Pin Mapping] keyword may be used with [External Model]s but is not required. If used, the [External Model] specific voltage supply ports -- A_puref, A_pdref, A_gcref, A_pcref, and A_extref -- are connected as defined under the [Pin Mapping] keyword. In all cases, the voltage levels connected on the reserved supply ports are defined by the [Power Clamp Reference], [GND Clamp Reference], [Pullup Reference], [Pulldown Reference], and/or [Voltage Range] keywords, as in the case of [Model].

Digital-to-Analog/Analog-to-Digital Conversions:

These subparameters define all digital-to-analog and analog-to-digital converters needed to properly connect digital signals with the analog ports of referenced external SPICE models. These subparameters must be used when [External Model] references a file written in the SPICE language. They are not permitted with Verilog-AMS or VHDL-AMS external files.

D_to_A:

As assumed in [Model], some interface ports of [External Model] circuits expect digital input signals. As SPICE models understand only analog signals, some conversion from digital

| to analog format is required. For example, input logical
| states such as '0' or '1,' implied in [Model], must be
| converted to actual input voltage stimuli, such as a voltage
| ramp, for SPICE simulation.
|
| The D_to_A subparameter provides information for converting
| a digital stimulus, such as '0' or '1', into an analog voltage
| ramp (a digital 'X' input is ignored by D_to_A converters).
| Each digital port which carries data for conversion to analog
| format must have its own D_to_A line.
|
| The D_to_A subparameter is followed by eight arguments:
|
| d_port port1 port2 vlow vhigh trise tfall corner_name
|
| The d_port entry holds the name of the digital. This entry is
| used for the reserved port names D_drive, D_enable, and
| D_switch. The port1 and port2 entries hold the SPICE analog
| input port names across which voltages are specified. These
| entries are used for the user-defined port names, together
| with another port name, used as a reference.
|
| Normally port1 accepts an input signal and port2 is the
| reference for port1. However, for an opposite polarity
| stimulus, port1 could be connected to a reference port and
| port2 could serve as the input.
|
| The vlow and vhigh entries accept analog voltage values which
| must correspond to the digital off and on states, where the
| vhigh value must be greater than the vlow value. For example,
| a 3.3 V ground-referenced buffer would list vlow as 0 V and
| vhigh as 3.3 V. The trise and tfall entries are times, must
| be positive and define input ramp rise and fall times between
| 0 and 100 percent.
|
| The corner_name entry holds the name of the external model
| corner being referenced, as listed under the Corner
| subparameter.
|
| At least one D_to_A line must be present, corresponding to the
| "Typ" corner model, for each digital line to be converted.
| Additional D_to_A lines for other corners may be omitted. In
| this case, the typical corner D_to_A entries will apply to all
| model corners and the "Typ" corner_name entry may be omitted.
|
|
| A_to_D:
|
| The A_to_D subparameter is used to generate a digital state
| ('0', '1', or 'X') based on analog voltages generated by the
| SPICE model or analog voltages present at the pad/pin. This
| allows an analog signal from the external SPICE circuit or
| pad/pin to be read as a digital signal by the simulation tool.
|
| The A_to_D subparameter is followed by six arguments:
|
| d_port port1 port2 vlow vhigh corner_name

| The d_port entry lists the reserved port name D_receive. As
| with D_to_A, the port1 entry would normally contain the
| reserved name A_signal (see below) or a user-defined port
| name, while port2 may list any other analog reserved port
| name, used as a reference. The voltage measurements are taken
| in this example from the port1 entry with respect to the port2
| entry. These ports must also be named by the Ports
| subparameter.
|
| The vlow and vhigh entries list the low and high analog
| threshold voltage values. The reported digital state on
| D_receive will be '0' if the measured voltage is lower than
| the vlow value, '1' if above the vhigh value, and 'X'
| otherwise.
|
| The corner_name entry holds the name of the external model
| corner being referenced, as listed under the Corner
| subparameter.
|
| At least one A_to_D line must be supplied corresponding to the
| "Typ" corner model. Other A_to_D lines for other corners may
| be omitted. In this case, the typical corner A_to_D entries
| will apply to all model corners.
|
| IMPORTANT: measurements for receivers in IBIS are normally
| assumed to be conducted at the die pads/pins. In such cases,
| the electrical input model data comprises a "load" which
| affects the waveform seen at the pads. However, for models
| measure the analog input response at the die pads or inside
| the circuit (this does not preclude tools from reporting
| digital D_receive and/or analog port responses in addition to
| at-pad A_signal response). If at-pad measurements are
| desired, the A_signal port would be named in the A_to_D line
| under port1. The A_to_D converter then effectively acts "in
| parallel" with the load of the circuit. If internal
| measurements are desired (e.g., if the user wishes to view the
| signal after processing by the receiver), the user-defined
| signal port would be named in the A_to_D line under port1. The
| A_to_D converter is effectively "in series" with the receiver
| model. The vhigh and vlow parameters should be adjusted as
| appropriate to the measurement point of interest.
|
| Note that, while the port assignments and SPICE model must
| be provided by the user, the D_to_A and A_to_D converters will
| be provided automatically by the tool (the converter
| parameters must still be declared by the user). There is no
| need for the user to develop external SPICE code specifically
| for these functions.
|
| A conceptual diagram of the port connections of a SPICE
| [External Model] is shown below. The example illustrates an
| I/O buffer. Note that the drawing implies that the D_receive
| state changes in response to the analog signal my_receive, not
| A_signal (see above):
|

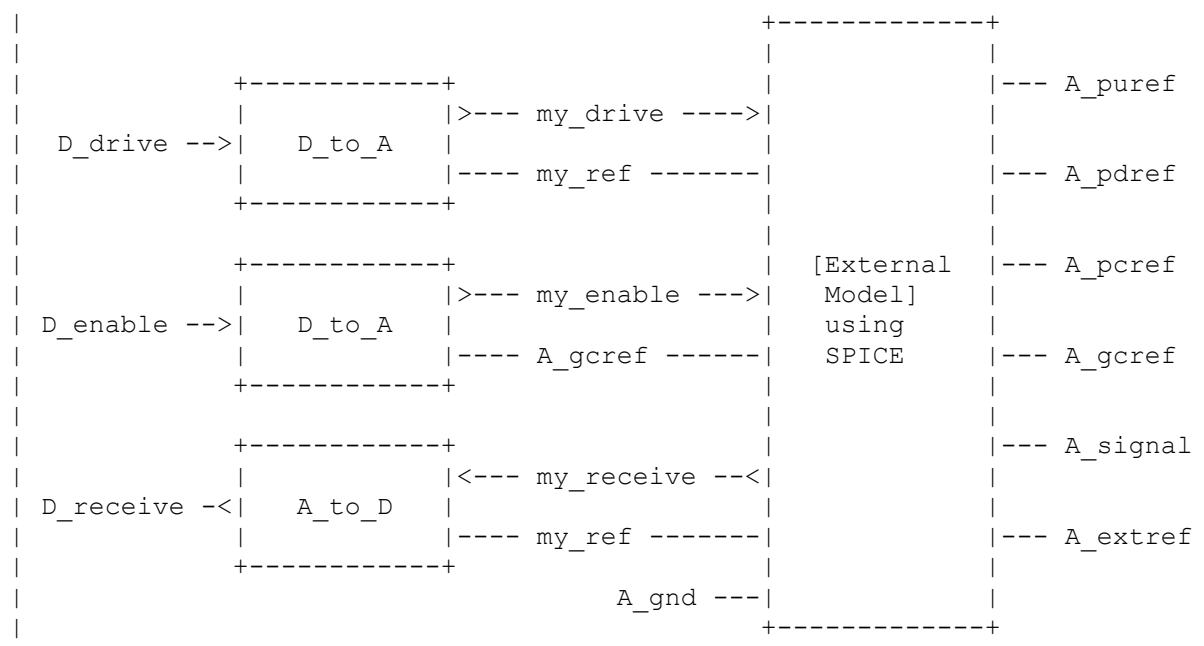

Figure 7: Example of an [External Model] I/O buffer using SPICE

An example of an [External Model] is shown at the end of this section.

Pseudo-Differential Buffers:

Pseudo-differential buffers may be described using a pair of [External Model]s which may or may not be identical. Each of the analog I/O signal ports (usually A_signal) is connected to a specific pad through the [Pin] list in the usual fashion, and the two ports are linked together as a differential pair through the [Diff Pin] keyword.

The reserved signal name A_signal is required for the I/O signal ports of [External Model]s connected to pads used in a pseudo-differential configuration.

Users should note that, in pseudo-differential buffers, only one formal signal port is used to stimulate the two [External Model] digital inputs (D_drive). One of these inputs will reflect the timing and polarity of the formal signal port named by the user, while the other input is inverted and (potentially) delayed with respect to the formal port as defined under the [Diff Pin] keyword. THIS SECOND PORT IS AUTOMATICALLY CREATED BY THE SIMULATION TOOL. Users do not have to create special structures to invert or delay the driven digital signal. Simulation tools will correctly implement the two input ports once the [Diff Pin] keyword has been detected in the .ibs file. This approach is identical to that used in native IBIS.

| The D_to_A adapters used for SPICE files can be set up to
| control ports on pseudo-differential buffers. If SPICE is
| used as an external language, the [Diff Pin] vdiff
| subparameter overrides the contents of vlow and vhigh under
| A_to_D.
|
| IMPORTANT: For pseudo-differential buffers under [External
| Model], the analog input response may only be measured at the
| die pads. The [Diff Pin] parameter is required, and controls
| both the polarity and the differential thresholds used to
| determine the D_receive port response (the D_receive port will
| follow the state of the non-inverting pin/pad as referenced
| to the inverting pin/pad). For SPICE models, the A_to_D line
| must name the A_signal port under either port1 or port2, as
| with a single-ended buffer. The A_to_D converter then
| effectively acts "in parallel" with the load of the buffer
| circuit. The vhigh and vlow parameters will be overriden by
| the [Diff Pin] vdiff declarations.
|
|
| The port relationships are shown in the examples below.
|

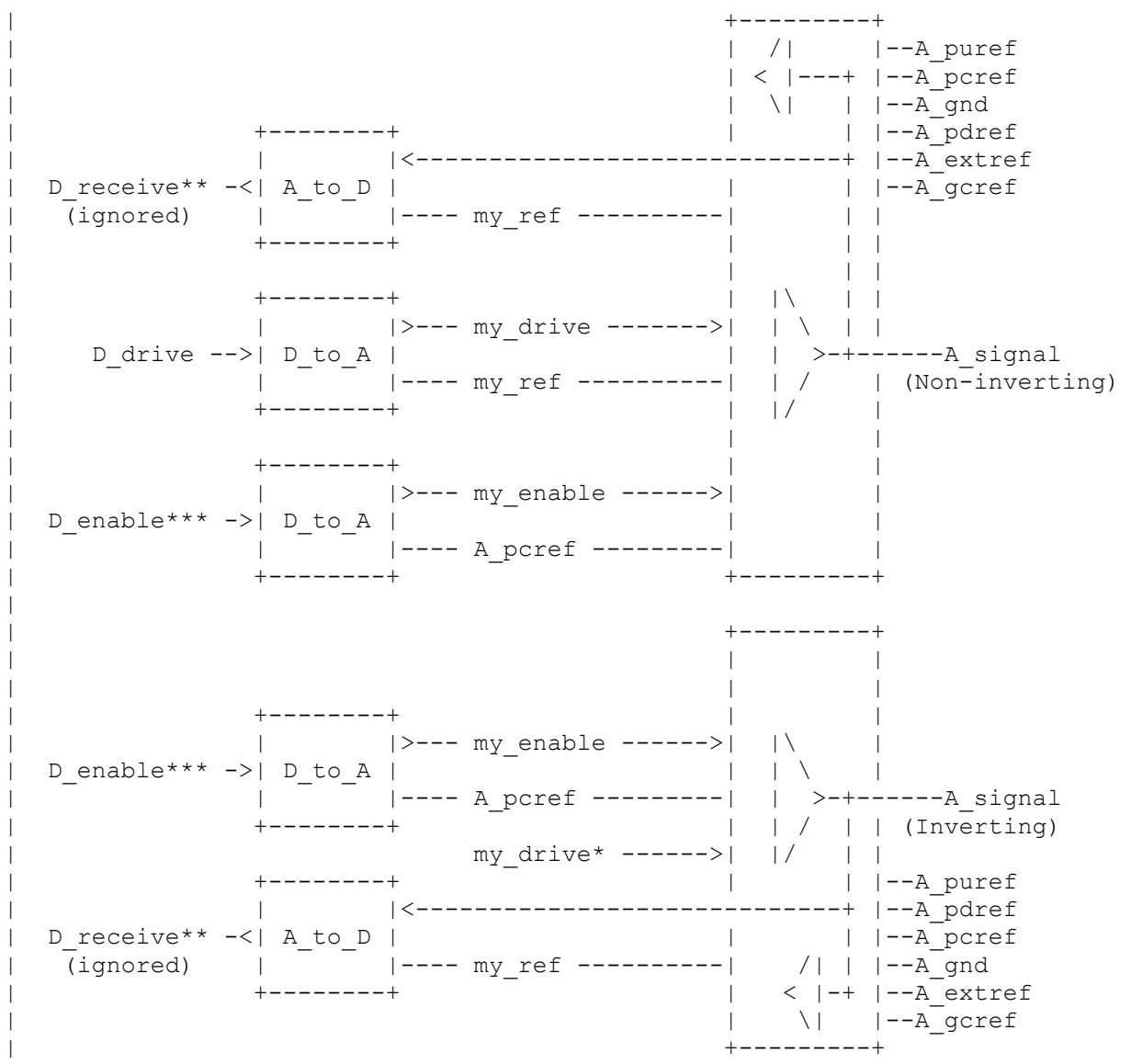

Figure 8 - Example SPICE implementation

* This signal is automatically created, by inverting and delaying D_drive based on the information in [Diff Pin].

** Pseudo-differential buffers must have A_to_D entries, but D_receive is determined by the state of A_signal (Inverting) and A_signal (Non-inverting) according to the [Diff Pin] declaration.

*** D_enable is shared between the separate buffers. This sharing is handled by the EDA tool.

The following drawing illustrates the same concepts with a *-AMS model. Note that the state of D_receive is determined by the tool automatically by observing the A_signal ports. The outputs of the actual receiver circuits in the *-AMS

models are not used for determining D_receive.

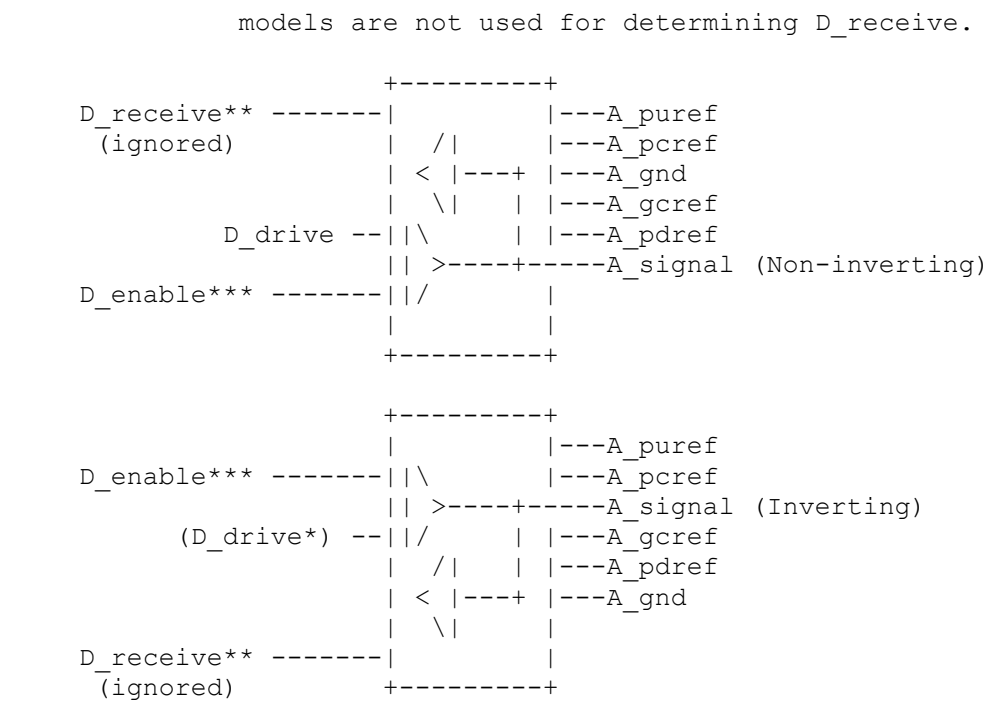

Figure 9 - Example *-AMS implementation

* This signal is automatically created, by inverting and delaying D_drive based on the information in [Diff Pin] (digital output will be based on evaluation of signals %% and && also using [Diff Pin])

** D_receive for pseudo-differential buffers is determined by the state of A_signal (Inverting) and A_signal (Non-inverting) according to the [Diff Pin] declaration.

*** D_enable is shared between the separate buffers. This sharing is handled by the EDA tool.

Two additional differential timing test loads are available:

Rref_diff, Cref_diff

These subparameters are also available under the [Model Spec] keyword for typical, minimum, and maximum corners.

These timing test loads require both sides of the differential model to be operated. They can be used with the existing timing test loads Rref, Cref, and Vref. The existing timing test loads and Vmeas are used if Rref_diff and Cref_diff are NOT given.

True Differential Models:

True differential buffers may be described using [External Model]. In a true differential [External Model], the differential I/O ports which connect to die pads use the

reserved names A_signal_pos and A_signal_neg, as shown in the diagram below.

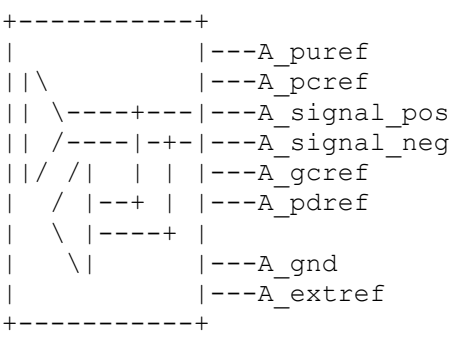

Figure 10

IMPORTANT: All true differential models under [External Model] assume single-ended digital port connections (D_drive, D_enable, D_receive).

The [Diff Pin] keyword is still required within the same [Component] definition when [External Model] describes a true differential buffer. The models referenced by each pin listed under [Diff Pin] MUST be the same.

The D_to_A or A_to_D adapters used for SPICE files may be set up to control or respond to true differential ports. An example is shown below.

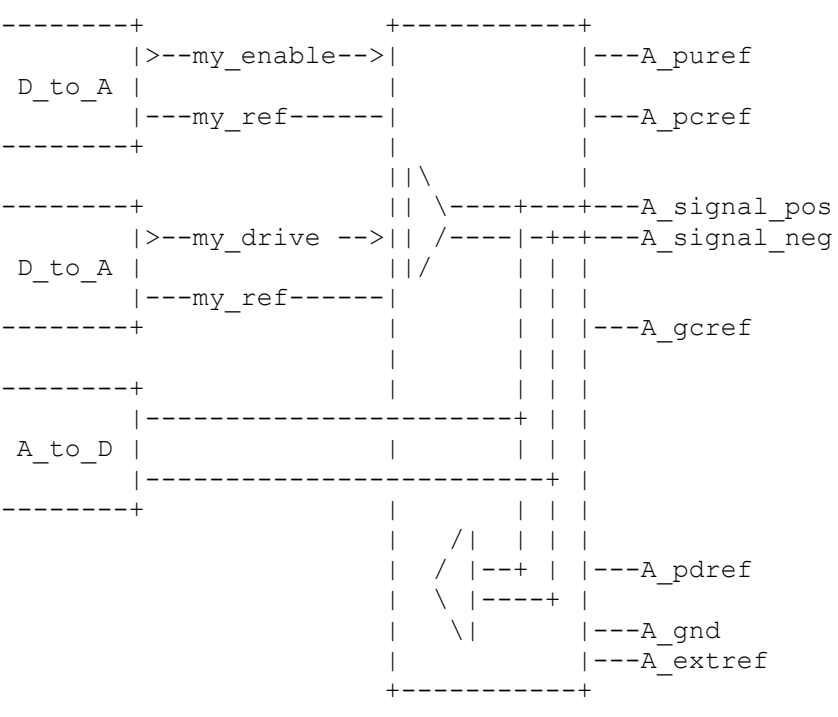

Figure 11: Example SPICE implementation of a true differential buffer

If at-pad or at-pin measurement using a SPICE [External Model] is desired, the vlow and vhigh entries under the A_to_D subparameter must be consistent with the values of the [Diff Pin] vdiff subparameter entry (the vlow value must match -vdiff, and the vhigh value must match +vdiff). The logic states produced by the A_to_D conversion follow the same rules as for single-ended buffers, listed above. An example is shown at the end of this section.

IMPORTANT: For true-differential buffers under [External Model], the user can choose whether to measure the analog input response at the die pads or internal to the circuit (this does not preclude tools from reporting digital D_receive and/or analog responses in addition to at-pad A_signal response). If at-pad measurements for a SPICE model are desired, the A_signal_pos port would be named in the A_to_D line under port1 and A_signal_neg under port2. The A_to_D converter then effectively acts "in parallel" with the load of the buffer circuit. If internal measurements are desired (e.g., if the user wishes to view the signal after processing by the input buffer), the user-defined analog signal port would be named in the A_to_D line under port1. The A_to_D converter is "in series" with the receiver buffer model. The vhigh and vlow parameters should be adjusted appropriate to the measurement point of interest, so long as they as they are consistent with the [Diff Pin] vdiff declarations.

Note that the thresholds refer to the state of the non-inverting signal, using the inverting signal as a reference. Therefore, the output signal is considered high when, for example, the non-inverting input is +200 mV above the inverting input. Similarly, the output signal is considered low when the same non-inverting input is -200 mV "above" the inverting input.

EDA tools will report the state of the D_receive port for true differential *-AMS [External Model]s according to the AMS code written by the model author; the use of [Diff Pin] does not affect the reporting of D_receive in this case. EDA tools are free to additionally report the state of the I/O pads according to the [Diff Pin] vdiff subparameter.

For both SPICE and *-AMS true differential [External Model]s, the EDA tool must not override or change the model author's connection of the D_receive port.

Four additional Model_type arguments are available under the [Model] keyword. One of these must be used when an [External Model] describes a true differential model:

I/O_diff, Output_diff, 3-state_diff, Input_diff

Two additional differential timing test loads are available:

Rref_diff, Cref_diff

These subparameters are also available under the [Model Spec] keyword for the typical, minimum, and maximum corner cases.

These timing test loads require that both the inverting and non-inverting ports of the differential model refer to valid buffer model data (not terminations, supply rails, etc.). The differential test loads may also be combined with the single-ended timing test loads Rref, Cref, and Vref. Note that the single-ended timing test loads plus Vmeas are used if Rref_diff and Cref_diff are NOT supplied.

Series and Series Switch Models:

Native IBIS did not define the transition characteristics of digital switch controls. Switches were assumed to either be on or off during a simulation and I-V characteristics could be defined for either or both states. The [External Model] format allows users to control the state of a switch through the D_switch port. As with other digital ports, the use of SPICE in an [External Model] requires the user to declare D_to_A ports, to convert the D_switch signal to an analog input to the SPICE model (whether the port's state may actually change during a simulation is determined by the EDA tool used).

Series and Series_switch devices both are described under the [External Model] keyword using the reserved port names A_pos and A_neg. Note that the [Series Pin Mapping] keyword must be present and correctly used elsewhere in the file, in order to properly set the logic state of the switch. The A_pos port is defined in the first entry of the [Series Pin Mapping] keyword, and the A_neg port is defined in the pin2 entry. For series switches, the [Series Switch Groups] keyword is required.

Ports required for various Model_types:

As [External Model] makes use of the [Model] keyword's Model_type subparameter, not all digital and analog reserved ports may be needed for all Model_types. The table below defines which reserved port names are required for various Model_types.

Model_type	D_drive	D_enable	D_receive	A_signal	D_switch	A_pos	A_neg
I/O*	X	X	X	X			
3-state*	X	X		X			
Output*, Open*	X			X			
Input			X	X			
Terminator				X			
Series						X	X
Series_switch					X	X	X

```
| Model_type   D_drive D_enable D_receive A_signal_pos A_signal_neg
|
| I/O_diff        X        X        X         X            X
| 3-state_diff    X        X                  X            X
| Output_diff     X                           X            X
| Input_diff                        X         X            X
|
|-------------------------------------------------------------------------------
| Example [External Model] using SPICE:
|--------------------------------------
|
[Model] ExBufferSPICE
Model_type I/O
Vinh = 2.0
Vinl = 0.8
|
| Other model subparameters are optional
|
|                 typ     min    max
[Voltage Range]   3.3     3.0    3.6
|
[Ramp]
dV/dt_r        1.57/0.36n   1.44/0.57n   1.73/0.28n
dV/dt_f        1.57/0.35n   1.46/0.44n   1.68/0.28n
|
[External Model]
Language SPICE
|
| Corner corner_name file_name       circuit_name (.subckt name)
Corner    Typ         buffer_typ.spi  buffer_io_typ
Corner    Min         buffer_min.spi  buffer_io_min
Corner    Max         buffer_max.spi  buffer_io_max
|
| Parameters - Not supported in SPICE
|
| Ports List of port names (in same order as in SPICE)
Ports A_signal my_drive my_enable my_receive my_ref
Ports A_puref A_pdref A_pcref A_gcref A_extref
|
| D_to_A d_port   port1     port2    vlow vhigh trise tfall corner_name
D_to_A   D_drive  my_drive   my_ref   0.0  3.3  0.5n  0.3n   Typ
D_to_A   D_enable my_enable  A_gcref  0.0  3.3  0.5n  0.3n   Typ
|
| A_to_D d_port    port1       port2       vlow  vhigh  corner_name
A_to_D   D_receive  my_receive  my_ref  0.8   2.0    Typ
|
| Note: A_signal might also be used instead of a user-defined interface port
| for measurements taken at the die pads
|
[End External Model]
|
```

```
|----------------------------------------
| Example [External Model] using VHDL-AMS:
|----------------------------------------
|
[Model] ExBufferVHDL
Model_type I/O
Vinh = 2.0
Vinl = 0.8
|
| Other model subparameters are optional
|
|                  typ     min    max
[Voltage Range]   3.3     3.0    3.6
|
[Ramp]
dV/dt_r        1.57/0.36n   1.44/0.57n   1.73/0.28n
dV/dt_f        1.57/0.35n   1.46/0.44n   1.68/0.28n
|
[External Model]
Language VHDL-AMS
|
| Corner corner_name file_name       circuit_name entity(architecture)
Corner    Typ         buffer_typ.vhd  buffer(buffer_io_typ)
Corner    Min         buffer_min.vhd  buffer(buffer_io_min)
Corner    Max         buffer_max.vhd  buffer(buffer_io_max)
|
| Parameters List of parameters
Parameters delay rate
Parameters preemphasis
|
| Ports List of port names (in same order as in VHDL-AMS)
Ports A_signal A_puref A_pdref A_pcref A_gcref
Ports D_drive D_enable D_receive
|
[End External Model]
|
|----------------------------------------
| Example [External Model] using Verilog-AMS:
|----------------------------------------
|
[Model] ExBufferVerilog
Model_type I/O
Vinh = 2.0
Vinl = 0.8
|
| Other model subparameters are optional
|
|                  typ     min    max
[Voltage Range]   3.3     3.0    3.6
|
[Ramp]
dV/dt_r        1.57/0.36n   1.44/0.57n   1.73/0.28n
dV/dt_f        1.57/0.35n   1.46/0.44n   1.68/0.28n
|
```

```
[External Model]
Language Verilog-AMS
|
| Corner corner_name file_name     circuit_name (module)
Corner    Typ         buffer_typ.v  buffer_io_typ
Corner    Min         buffer_min.v  buffer_io_min
Corner    Max         buffer_max.v  buffer_io_max
|
| Parameters List of parameters
Parameters delay rate
Parameters preemphasis
|
| Ports List of port names (in same order as in Verilog-AMS)
Ports A_signal A_puref A_pdref A_pcref A_gcref
Ports D_drive D_enable D_receive
|
[End External Model]
|
|------------------------------------------------------------
| Example of True Differential [External Model] using SPICE:
|------------------------------------------------------------
|
[Model] Ext_SPICE_Diff_Buff
Model_type I/O_diff
Rref_diff = 100
|
| Other model subparameters are optional
|
|                 typ     min    max
[Voltage Range]   3.3     3.0    3.6
|
[Ramp]
dV/dt_r        1.57/0.36n   1.44/0.57n   1.73/0.28n
dV/dt_f        1.57/0.35n   1.46/0.44n   1.68/0.28n
|
[External Model]
Language SPICE
|
| Corner corner_name file_name   circuit_name (.subckt name)
Corner    Typ         diffio.spi  diff_io_typ
Corner    Min         diffio.spi  diff_io_min
Corner    Max         diffio.spi  diff_io_max
|
| Ports List of port names (in same order as in SPICE)
Ports A_signal_pos A_signal_neg my_receive my_drive my_enable
Ports A_puref A_pdref A_pcref A_gcref A_extref my_ref A_gnd
|
| D_to_A d_port   port1      port2    vlow vhigh trise tfall corner_name
D_to_A    D_drive  my_drive   my_ref   0.0  3.3   0.5n  0.3n  Typ
D_to_A    D_drive  my_drive   my_ref   0.0  3.0   0.6n  0.3n  Min
D_to_A    D_drive  my_drive   my_ref   0.0  3.6   0.4n  0.3n  Max
D_to_A    D_enable my_enable  my_ref   0.0  3.3   0.5n  0.3n  Typ
D_to_A    D_enable my_enable  my_ref   0.0  3.0   0.6n  0.3n  Min
D_to_A    D_enable my_enable  my_ref   0.0  3.6   0.4n  0.3n  Max
|
```

```
| A_to_D d_port     port1         port2         vlow   vhigh corner_name
A_to_D    D_receive  A_signal_pos  A_signal_neg  -200m  200m  Typ
A_to_D    D_receive  A_signal_pos  A_signal_neg  -200m  200m  Min
A_to_D    D_receive  A_signal_pos  A_signal_neg  -200m  200m  Max
|
[End External Model]
|
|
|-------------------------------------------------------------
| Example of True Differential [External Model] using VHDL-AMS:
|-------------------------------------------------------------
|
[Model] Ext_VHDL_Diff_Buff
Model_type I/O_diff
Rref_diff = 100
|
|                  typ     min    max
[Voltage Range]   3.3     3.0    3.6
|
[Ramp]
dV/dt_r        1.57/0.36n   1.44/0.57n   1.73/0.28n
dV/dt_f        1.57/0.35n   1.46/0.44n   1.68/0.28n
|
| Other model subparameters are optional
|
[External Model]
Language VHDL-AMS
|
| Corner corner_name  file_name       circuit_name entity(architecture)
Corner    Typ          diffio_typ.vhd  buffer(diff_io_typ)
Corner    Min          diffio_min.vhd  buffer(diff_io_min)
Corner    Max          diffio_max.vhd  buffer(diff_io_max)
|
| Parameters List of parameters
Parameters delay rate
Parameters preemphasis
|
| Ports List of port names (in same order as in VHDL-AMS)
Ports A_signal_pos A_signal_neg D_receive D_drive D_enable
Ports A_puref A_pdref A_pcref A_gcref
|
[End External Model]
|
|-------------------------------------------------------------
| Example of Pseudo-Differential [External Model] using SPICE:
|-------------------------------------------------------------
|
| Note that [Pin] and [Diff Pin] declarations are shown for clarity
|
|
[Pin] signal_name model_name R_pin L_pin C_pin
1 Example_pos Ext_SPICE_PDiff_Buff
2 Example_neg Ext_SPICE_PDiff_Buff
|
| ...
|
```

```
[Diff Pin] inv_pin vdiff tdelay_typ tdelay_min tdelay_max
1            2     200mV    0ns        0ns        0ns
|
| ...
|
[Model] Ext_SPICE_PDiff_Buff
Model_type I/O
|
| Other model subparameters are optional
|
|                  typ     min    max
[Voltage Range]   3.3     3.0    3.6
|
[Ramp]
dV/dt_r        1.57/0.36n   1.44/0.57n   1.73/0.28n
dV/dt_f        1.57/0.35n   1.46/0.44n   1.68/0.28n
|
[External Model]
Language SPICE
|
| Corner  corner_name  file_name   circuit_name (.subckt name)
Corner     Typ          diffio.spi  diff_io_typ
Corner     Min          diffio.spi  diff_io_min
Corner     Max          diffio.spi  diff_io_max
|
| Ports List of port names (in same order as in SPICE)
Ports A_signal my_drive my_enable my_ref
Ports A_puref A_pdref A_pcref A_gcref A_gnd A_extref
|
| D_to_A d_port   port1      port2    vlow vhigh trise tfall corner_name
D_to_A    D_drive  my_drive   my_ref   0.0  3.3   0.5n  0.3n  Typ
D_to_A    D_drive  my_drive   my_ref   0.0  3.0   0.6n  0.3n  Min
D_to_A    D_drive  my_drive   my_ref   0.0  3.6   0.4n  0.3n  Max
D_to_A    D_enable my_enable  A_pcref  0.0  3.3   0.5n  0.3n  Typ
D_to_A    D_enable my_enable  A_pcref  0.0  3.0   0.6n  0.3n  Min
D_to_A    D_enable my_enable  A_pcref  0.0  3.6   0.4n  0.3n  Max
|
| A_to_D d_port     port1     port2     vlow  vhigh corner_name
A_to_D    D_receive  A_signal  my_ref    0.8    2.0   Typ
A_to_D    D_receive  A_signal  my_ref    0.8    2.0   Min
A_to_D    D_receive  A_signal  my_ref    0.8    2.0   Max
|
| This example shows the evaluation of the received signals at the die
| pads.  [Diff Pin] defines the interpretation of the A_to_D output
| polarity and levels and overrides the A_to_D settings shown above.
|
[End External Model]
|
|================================================================================
```

|==
| **Keywords:** **[External Circuit], [End External Circuit]**
| Required: No
| Description: Used to reference an external file containing an arbitrary
| circuit description using one of the supported languages.
| Sub-Params: Language, Corner, Parameters, Ports, D_to_A, A_to_D
| Usage Rules: Each [External Circuit] keyword must be followed by a unique
| name that differs from any name used for any [Model] or
| [Submodel] keyword.
|
| The [External Circuit] keyword may appear multiple times. It
| is not scoped by any other keyword.
|
| Each instance of an [External Circuit] is referenced by one or
| more [Circuit Call] keywords discussed later. (The [Circuit
| Call] keyword cannot be used to reference a [Model] keyword.)
|
| The [External Circuit] keyword and contents may be placed
| anywhere in the file, outside of any [Component] keyword group
| or [Model] keyword group, in a manner similar to that of the
| [Model] keyword.
|
|
| Subparameter Definitions:
|
|
| Language:
|
| Accepts "SPICE", "VHDL-AMS", or "Verilog-AMS" as arguments.
| The Language subparameter is required and may appear only
| once.
|
|
| Corner:
|
| Three entries follow the Corner subparameter on each line:
|
| corner_name file_name circuit_name
|
| The corner_name entry is "Typ", "Min", or "Max". The
| file_name entry points to the referenced file in the same
| directory as the .ibs file.
|
| Up to three Corner lines are permitted. A "Typ" line is
| required. If "Min" and/or "Max" data is missing, the tool may
| use "Typ" data in its place. However, the tool should notify
| the user of this action.
|
| The circuit_name entry provides the name of the circuit to be
| simulated within the referenced file. For SPICE files, this
| is normally a ".subckt" name. For VHDL-AMS files, this is
| normally an "entity(architecture)" name pair. For Verilog-AMS
| files, this is normally a "module" name.
|
| No character limits, case-sensitivity limits or extension
| conventions are required or enforced for file_name and
| circuit_name entries. However, the total number of characters

in each Corner line must comply with Section 3. Furthermore, lower-case file_name entries are recommended to avoid possible conflicts with file naming conventions under different operating systems. Case differences between otherwise identical file_name entries or circuit_name entries should be avoided. External languages may not support case-sensitive distinctions.

Parameters:

Lists names of parameters that may be passed into an external circuit file. Each Parameters assignment must match a name or keyword in the external file or language. The list of Parameters can span several lines by using the word Parameters at the start of each line. The Parameters subparameter is optional, and the external circuit must operate with default settings without any Parameters assignments.

Parameter passing is not supported in SPICE. VHDL-AMS parameters are supported using "generic" names, and Verilog-AMS parameters are supported using "parameter" names.

Ports:

Ports are interfaces to the [External Model] which are available to the user and tool at the IBIS level. They are used to connect the [External Model] to die pads. The Ports parameter is used to identify the ports of the [External Model] to the simulation tool. The port assignment is by position and the port names do not have to match exactly the names inside the external file. The list of port names may span several lines if the word Ports is used at the start of each line.

The Ports parameter is used to identify the ports of the [External Circuit] to the simulation tool. The port assignment is by position and the port names do not have to match exactly the port names in the external file. The list of port names may span several lines if the word Ports is used at the start of each line.

[External Circuit] allows any number of ports to be defined, with any names which comply with Section 3 format requirements. Reserved port names may be used, but ONLY DIGITAL PORTS will have the pre-defined functions listed in the General Assumptions heading above. User-defined and reserved port names may be combined within the same [External Circuit].

The [Pin Mapping] keyword cannot be used with [External Circuit] in the same [Component] description.

Digital-to-Analog/Analog-to-Digital Conversions:

These subparameters define all digital-to-analog and analog-to-digital converters needed to properly connect digital signals with the analog ports of referenced external SPICE models. These subparameters must be used when [External Circuit] references a file written in the SPICE language. They are not permitted with Verilog-AMS or VHDL-AMS external files.

D_to_A:

As assumed in [Model] and [External Model], some interface ports of [External Circuit]s expect digital input signals. As SPICE models understand only analog signals, some conversion from digital to analog format is required. For example, input logical states such as '0' or '1' must be converted to actual input voltage stimuli, such as a voltage ramp, for SPICE simulation.

The D_to_A subparameter provides information for converting a digital stimulus, such as '0' or '1', into an analog voltage ramp (a digital 'X' input is ignored by D_to_A converters). Each digital port which carries data for conversion to analog format must have its own D_to_A declaration.

The D_to_A subparameter is followed by eight arguments:

```
d_port port1 port2 vlow vhigh trise tfall corner_name
```

The d_port entry holds the name of the digital port. This entry may contain user-defined port names or the reserved port names D_drive, D_enable, and D_switch. The port1 and port2 entries hold the SPICE analog input port names across which voltages are specified. These entries contain user-defined port names. One of these port entries must name a reference for the other port (for example, A_gnd).

Normally, port1 accepts an input signal and port2 is the reference for port1. However, for an opposite polarity stimulus, port1 could be connected to a voltage reference and port2 could serve as the input.

The vlow and vhigh entries accept voltage values which correspond to fully-off and fully-on states, where the vhigh value must be greater than the vlow value. For example, a 3.3 V ground-referenced buffer would list vlow as 0 V and vhigh as 3.3 V. The trise and tfall entries are times, must be positive and define input ramp rise and fall times between 0 and 100 percent.

The corner_name entry holds the name of the external circuit corner being referenced, as listed under the Corner subparameter.

Any number of D_to_A subparameter lines is allowed, so long as each contains a unique port_name entry and at least one unique port1 or port2 entry (i.e., several D_to_A declarations may use the same reference node under port1 or port2). At least one D_to_A line must be present, corresponding to the "Typ" corner model, for each digital line to be converted. Additional D_to_A lines for other corners may be omitted. In this case, the typical corner D_to_A entries will apply to all model corners and the "Typ" corner_name entry may be omitted.

A_to_D:

The A_to_D subparameter is used to generate a digital state ('0', '1', or 'X') based on analog voltages from the SPICE model or from the pad/pin. This allows an analog signal from the external SPICE circuit to be read as a digital signal by the simulation tool. Each analog port which carries data for conversion to digital format must have its own A_to_D declaration line.

The A_to_D subparameter is followed by six arguments:

```
d_port port1 port2 vlow vhigh corner_name
```

The d_port entry lists port names to be used for digital signals going. As with D_to_A, the port1 entry would contain a user-defined analog signal. Port2 would list another port name to be used as a reference. The voltage measurements are taken from the port1 entry with respect to the port2 entry. These ports must also be named by the Ports subparameter.

The vlow and vhigh entries list the low and high analog threshold voltage values. The reported digital state on D_receive will be '0' if the measured voltage is lower than the vlow value, '1' if above the vhigh value, and 'X' otherwise.

The corner_name entry holds the name of the external model corner being referenced, as listed under the Corner subparameter.

Any number of A_to_D subparameter lines is allowed, so long as each contains a unique port_name entry and at least one unique port1 or port2 entry (i.e., several A_to_D declarations may use the same reference node under port1 or port2). For example, a user may wish to create additional A_to_D converters for individual analog signals to monitor common mode behaviors on differential buffers (see below).

At least one A_to_D line must be supplied corresponding to the "Typ" corner model. Other A_to_D lines for other corners may be omitted. In this case, the typical corner D_to_A entries will apply to all model corners.

IMPORTANT: measurements for receivers in IBIS may be conducted at the die pads or the pins. In such cases, the electrical

```
|               input model data comprises a "load" which affects the waveform
|               seen.  However, for [External Circuit]s, the user may choose
|               whether to measure the analog input response in the usual
|               fashion or internal to the circuit (this does not preclude
|               tools from reporting digital D_receive and/or analog responses
|               in addition to normal A_signal response).  If native IBIS
|               measurements are desired, the A_signal port would be named in
|               the A_to_D line under port1.  The A_to_D converter then
|               effectively acts "in parallel" with the load of the circuit.
|               If internal measurements are desired (e.g., if the user wishes
|               to view the signal after processing by the receiver), the
|               user-defined analog signal port would be named in the A_to_D
|               line under port1.  The A_to_D converter is effectively
|               "in series" with the receiver model.  The vhigh and vlow
|               parameters should be adjusted appropriate to the measurement
|               point of interest.
|
|               Note that, while the port assignments and SPICE model data
|               must be provided by the user, the D_to_A and A_to_D converters
|               will be provided automatically by the tool.  There is no need
|               for the user to develop external SPICE code specifically for
|               these functions.
|
|               The [Diff Pin] keyword is NOT required for true differential
|               [External Circuit] descriptions.
|
|               Pseudo-differential buffers are not supported under [External
|               Circuit].  Use the existing [Model] and [External Model]
|               keywords to describe these structures.
|
|               Note that the EDA tool is responsible for determining the
|               specific measurement points for reporting timing and signal
|               quality for [External Circuit]s.
|
|               In all other respects, [External Circuit] behaves exactly as
|               [External Model].
|
|-------------------------------------------------------------------------------
| Model B as an [External Circuit]
|---------------------------------------
| Example [External Circuit] using SPICE:
|---------------------------------------
|
[External Circuit] BUFF-SPICE
Language SPICE
|
| Corner corner_name file_name       circuit_name (.subckt name)
Corner    Typ         buffer_typ.spi  bufferb_io_typ
Corner    Min         buffer_min.spi  bufferb_io_min
Corner    Max         buffer_max.spi  bufferb_io_max
|
| Parameters - Not supported in SPICE
|
| Ports List of port names (in same order as in SPICE)
Ports A_signal int_in int_en int_out A_control
Ports A_puref A_pdref A_pcref A_gcref
|
```

```
| D_to_A d_port   port1  port2    vlow vhigh trise tfall corner_name
D_to_A   D_drive  int_in  my_gcref 0.0  3.3   0.5n  0.3n  Typ
D_to_A   D_drive  int_in  my_gcref 0.0  3.0   0.6n  0.3n  Min
D_to_A   D_drive  int_in  my_gcref 0.0  3.6   0.4n  0.3n  Max
D_to_A   D_enable int_en  my_gnd   0.0  3.3   0.5n  0.3n  Typ
D_to_A   D_enable int_en  my_gnd   0.0  3.0   0.6n  0.3n  Min
D_to_A   D_enable int_en  my_gnd   0.0  3.6   0.4n  0.3n  Max
|
| A_to_D d_port     port1    port2     vlow vhigh corner_name
A_to_D    D_receive  int_out  my_gcref  0.8  2.0   Typ
A_to_D    D_receive  int_out  my_gcref  0.8  2.0   Min
A_to_D    D_receive  int_out  my_gcref  0.8  2.0   Max
|
| Note, the A_signal port might also be used and int_out not defined in
| a modified .subckt.
|
[End External Circuit]
|
|-----------------------------------------
| Example [External Circuit] using VHDL-AMS:
|-----------------------------------------
|
[External Circuit] BUFF-VHDL
Language VHDL-AMS
|
| Corner corner_name file_name       circuit_name entity(architecture)
Corner    Typ         buffer_typ.vhd  bufferb(buffer_io_typ)
Corner    Min         buffer_min.vhd  bufferb(buffer_io_min)
Corner    Max         buffer_max.vhd  bufferb(buffer_io_max)
|
| Parameters List of parameters
Parameters delay rate
Parameters preemphasis
|
| Ports List of port names (in same order as in VHDL-AMS)
Ports A_signal A_puref A_pdref A_pcref A_gcref A_control
Ports D_drive D_enable D_receive
|
[End External Circuit]
|
|-------------------------------------------
| Example [External Circuit] using Verilog-AMS:
|-------------------------------------------
|
[External Circuit] BUFF-VERILOG
Language Verilog-AMS
|
| Corner corner_name file_name     circuit_name (module)
Corner    Typ         buffer_typ.v  bufferb_io_typ
Corner    Min         buffer_min.v  bufferb_io_min
Corner    Max         buffer_max.v  bufferb_io_max
|
| Parameters List of parameters
Parameters delay rate
Parameters preemphasis
|
```

```
| Ports List of port names (in same order as in Verilog-AMS)
Ports A_signal A_puref A_pdref A_pcref A_gcref A_control
Ports D_drive D_enable D_receive
|
[End External Circuit]
|
| Interconnect Structure as an [External Circuit]
|
|----------------------------------------
| Example [External Circuit] using SPICE:
|----------------------------------------
|
[External Circuit] BUS_SPI
Language SPICE
|
| Corner corner_name file_name   circuit_name (.subckt name)
Corner    Typ        bus_typ.spi  Bus_typ
Corner    Min        bus_min.spi  Bus_min
Corner    Max        bus_max.spi  Bus_max
|
| Parameters - Not supported in SPICE
|
| Ports are in same order as defined in SPICE
Ports vcc gnd io1 io2
Ports int_ioa vcca1 vcca2 vssa1 vssa2
Ports int_iob vccb1 vccb2 vssb1 vssb2
|
| No A_to_D or D_to_A required, as no digital ports are used
|
[End External Circuit]
|
|-----------------------------------------
| Example [External Circuit] using VHDL-AMS:
|-----------------------------------------
|
[External Circuit] BUS_VHD
Language VHDL-AMS
|
| Corner corner_name file_name  circuit_name entity(architecture)
Corner    Typ        bus.vhd     Bus(Bus_typ)
Corner    Min        bus.vhd     Bus(Bus_min)
Corner    Max        bus.vhd     Bus(Bus_max)
|
| Parameters List of parameters
Parameters r1 l1
Parameters r2 l2 temp
|
| Ports are in the same order as defined in VHDL-AMS
Ports vcc gnd io1 io2
Ports int_ioa vcca1 vcca2 vssa1 vssa2
Ports int_iob vccb1 vccb2 vssb1 vssb2
|
```

```
|-------------------------------------------
| Example [External Circuit] using Verilog-AMS:
|-------------------------------------------
|
[External Circuit] BUS_V
Language Verilog-AMS
|
| Corner corner_name file_name circuit_name (module)
Corner    Typ         bus.v     Bus_typ
Corner    Min         bus.v     Bus_min
Corner    Max         bus.v     Bus_max
|
| Parameters List of parameters
Parameters r1 l1
Parameters r2 l2 temp
|
| Ports are in the same order as defined in Verilog-AMS
Ports vcc gnd io1 io2
Ports int_ioa vcca1 vcca2 vssa1 vssa2
Ports int_iob vccb1 vccb2 vssb1 vssb2
|
[End External Circuit]
|
|=============================================================================
|
The scope of the following keywords is limited to the [Component] keyword.
They apply to the specific set of pin numbers and internal nodes only within
that [Component].
|
|=============================================================================
|    Keywords:  [Node Declarations], [End Node Declarations]
|    Required:  Yes, if any internal nodes exist on the die as listed in
|               [Circuit Call], and/or if any die pads need to be explicitly
|               defined.
| Description:  Provides a list of internal die nodes and/or die pads for a
|               [Component] to make unambiguous interconnection descriptions
|               possible.
| Usage Rules:  All die node and die pad names that appear under any [Circuit
|               Call] keyword within the same [Component] must be listed under
|               the [Node Declarations] keyword.
|
|               If used, the [Node Declarations] keyword must appear before
|               any [Circuit Call] keyword(s) under the [Component] keyword.
|               Only one [Node Declarations] keyword is permitted for each
|               [Component] keyword.  Since the [Node Declarations] keyword
|               is part of the [Component] keyword, all internal node or pad
|               references apply only to that [Component] (i.e., they are
|               local).
|
|               The internal die node and/or die pad names within [Node
|               Declarations] must be unique and therefore different from
|               the pin names used in the [Pin] keyword.  Each node and/or
|               pad name must be separated by at least one white space.  The
|               list may span several lines and is terminated by the [End
|               Node Declarations] keyword.
|
```

```
|               The names of die nodes and die pads can be composed of any
|               combination of the legal characters outlined in Section 3.
|-------------------------------------------------------------------------------
[Node Declarations]          | Must appear before any [Circuit Call] keyword
|
| Die nodes:
a b c d e                    | List of die nodes
f g h nd1
|
| Die pads:
pad_2a pad_2b pad_4 pad_11   | List of die pads
|
[End Node Declarations]
|
|===============================================================================
|    Keywords:  [Circuit Call], [End Circuit Call]
|    Required:  Yes, if any [External Circuit]s are present in a [Component].
| Description:  This keyword is used to instantiate [External Circuit]s and
|               to connect their ports to the die nodes or die pads.
|  Sub-Params:  Signal_pin, Diff_signal_pins, Series_pins, Port_map
| Usage Rules:  The [Circuit Call] keyword must be followed by the name of
|               an [External Circuit] that exists in the same [Component].
|
|               When a [Circuit Call] keyword defines any connections that
|               involve one or more die pads (and consequently pins), the
|               corresponding pins on the [Pin] list must use the reserved
|               word "CIRCUITCALL" in the third column instead of a model
|               name.
|
|               Each [External Circuit] must have at least one corresponding
|               [Circuit Call] keyword.  Multiple [Circuit Call] keywords may
|               appear under a [Component] using the same [External Circuit]
|               name, if multiple instantiations of an [External Circuit] are
|               needed.
|
|
|               Signal_pin, Diff_signal_pins, or Series_pins:
|
|               The purpose of these subparameters is to identify which
|               [External Circuit] needs to be stimulated in order to obtain
|               a signal on a certain pin.  These subparameters must be used
|               only when the [External Circuit] that is referenced by the
|               [Circuit Call] keyword has an effect on a pin.  Only one of
|               the three subparameters is permitted in a given [Circuit Call]
|               keyword.  The subparameters are followed by one or two pin
|               names which are defined by the [Pin] keyword.
|
|               Signal_pin is used when the referenced [External Circuit] has
|               a single analog signal port (I/O) connection to one pin.  The
|               subparameter is followed by a pin name that must match one of
|               the pin names under the [Pin] keyword.
|
|               Diff_signal_pins is used when the referenced [External
|               Circuit] describes a true differential model which has two
|               analog signal port (I/O) connections, each to a separate pin.
|               The subparameter is followed by two pin names, each of which
|               must match one of the pin names under the [Pin] keyword.  The
```

| first and second pin names correspond to the non-inverting and
| inverting signals of the differential model, respectively.
| The two pin names must not be identical.
|
| Series_pins is used when the referenced [External Circuit]
| describes a Series or Series_switch model which has two analog
| signal port (I/O) connections to two pins. The subparameter
| is followed by two pin names, each of which must match one of
| the pin names under the [Pin] keyword. The first and second
| pin names correspond to the positive and negative ports of the
| Series or Series_switch model, respectively. However, the
| polarity order matters only when the model is polarity
| sensitive (as with the [Series Current] keyword). The two pin
| names must not be identical.
|
|
| Port_map:
|
| The Port_map subparameter is used to connect the ports of an
| [External Circuit] to die nodes or die pads.
|
| Every occurrence of the Port_map subparameter must begin on a
| new line and must be followed by two arguments, the first
| being a port name, and the second being a die node, die pad,
| or a pin name.
|
| The first argument of Port_map must contain a port name that
| matches one of the port names in the corresponding [External
| Circuit] definition. No port name may be listed more than
| once within a [Circuit Call] statement. Only those port names
| need to be listed with the Port_map subparameter which are
| connected to a die node or a die pad. This includes reserved
| and/or user-defined port names.
|
| The second argument of the Port_map subparameter contains
| the name of a die node, die pad, or a pin. The names of die
| nodes, die pads, and pins may appear multiple times as
| Port_map subparameter arguments within the same [Circuit
| Call] statement to signify a common connection between
| multiple ports, such as common voltage supply.
|
| Please note that a pin name in the second argument does not
| mean that the connection is made directly to the pin. Since
| native IBIS does not have a mechanism to declare die pads
| explicitly, connections to die pads are made through their
| corresponding pin names (listed under the [Pin] keyword).
| This convention must only be used with native IBIS package
| models where a one-to-one path between the die pads and pins
| is assumed. When a package model other than native IBIS is
| used with a [Component], the second argument of Port_map must
| have a die pad or die node name. These names are matched to
| the corresponding port name of the non-native package model by
| name (not by position). In this case, the package model may
| have an arbitrary circuit topology between the die pads and
| the pins. A one-to-one mapping is not required.
|---

```
| Examples:
|-------------------------------------------------------------------------------
|
| For the examples below please refer to the following diagram and the
| example provided for the [Node Declarations] keyword.
|
```

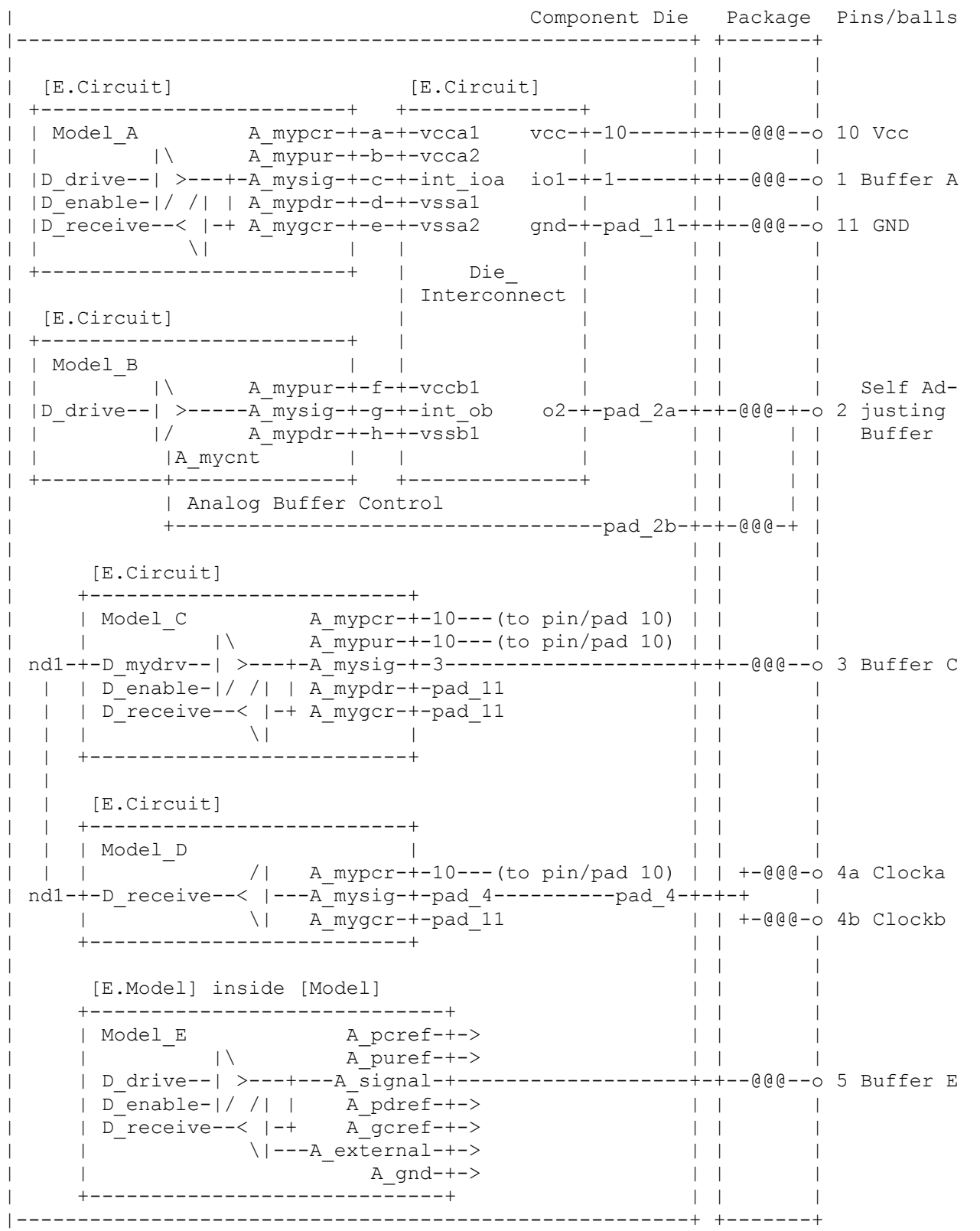
Component Die
Package
Pins/balls
[E.Circuit]
Model_A
A_mypcr
A_mypur
A_mysig
A_mypdr
A_mygcr
A_mycnt
vcc
io1
gnd
pad_11
10 Vcc
1 Buffer A
11 GND
Die_
Interconnect
Model_B
A_mypur
A_mysig
A_mypdr
vccb1
int_ob
o2
pad_2a
vssb1
2 justing
Self Ad-
Buffer
Analog Buffer Control
pad_2b
Model_C
A_mypcr
A_mypur
10---(to pin/pad 10)
nd1
D_mydrv
A_mysig
3
A_mypdr
pad_11
A_mygcr
pad_11
3 Buffer C
Model_D
A_mypcr
10---(to pin/pad 10)
nd1
D_receive
A_mysig
pad_4
pad_4
4a Clocka
A_mygcr
pad_11
4b Clockb
[E.Model] inside [Model]
Model_E
A_pcref
A_puref
D_drive
D_enable
D_receive
A_signal
A_pdref
A_gcref
A_external
A_gnd
5 Buffer E

```
| Notes:
| 1) The ports of the [External Model] Model_E are automatically connected by
| the tool, taking the [Pin Mapping] keyword into consideration, if exists.
| 2) The package model shown in this drawing assumes the capabilities of a
| non-native IBIS package model are available to the model author.
|
| Figure 12
|
|
[Circuit Call] Model_A            | Instantiates [External Circuit] named "A"
|
Signal_pin 1
|
| mapping  port          pad/node
|
Port_map   A_mypcr       a        | Port to internal node connection
Port_map   A_mypur       b        | Port to internal node connection
Port_map   A_mysig       c        | Port to internal node connection
Port_map   A_mypdr       d        | Port to internal node connection
Port_map   A_mygcr       e        | Port to internal node connection
|
[End Circuit Call]
|
|
[Circuit Call] Model_B            | Instantiates [External Circuit] named "B"
|
Signal_pin 2
|
| mapping  port          pad/node
|
Port_map   A_mypur       f        | Port to internal node connection
Port_map   A_mysig       g        | Port to internal node connection
Port_map   A_mypdr       h        | Port to internal node connection
Port_map   A_mycnt       pad_2b   | Port to explicit pad connection
|
[End Circuit Call]
|
|
[Circuit Call] Model_C            | Instantiates [External Circuit] named "C"
|
Signal_pin 3
|
| mapping  port          pad/node
|
Port_map   A_mypcr       10       | Port to implicit pad connection
Port_map   A_mypur       10       | Port to implicit pad connection
Port_map   A_mysig       3        | Port to implicit pad connection
Port_map   A_mypdr       pad_11   | Port to explicit pad connection
Port_map   A_mygcr       pad_11   | Port to explicit pad connection
Port_map   D_mydrv       nd1      | Port to internal node connection
|
[End Circuit Call]
|
|
```

```
[Circuit Call] Model_D            | Instantiates [External Circuit] named "D"
|
Signal_pin 4a
|
| mapping  port          pad/node
|
Port_map   A_my_pcref    10       | Port to implicit pad connection
Port_map   A_my_signal   pad_4    | Port to explicit pad connection
Port_map   A_my_gcref    pad_11   | Port to explicit pad connection
Port_map   D_receive     nd1      | Port to internal node connection
|
[End Circuit Call]
|
|
[Circuit Call] Die_Interconnect   | Instantiates [External Circuit] named
|                                   "Die_Interconnect"
|
| mapping  port          pad/node
|
Port_map   vcc           10       | Port to implicit pad connection
Port_map   gnd           pad_11   | Port to explicit pad connection
Port_map   io1           1        | Port to implicit pad connection
Port_map   o2            pad_2a   | Port to explicit pad connection
Port_map   vcca1         a        | Port to internal node connection
Port_map   vcca2         b        | Port to internal node connection
Port_map   int_ioa       c        | Port to internal node connection
Port_map   vssa1         d        | Port to internal node connection
Port_map   vssa2         e        | Port to internal node connection
Port_map   vccb1         f        | Port to internal node connection
Port_map   int_ob        g        | Port to internal node connection
Port_map   vssb1         h        | Port to internal node connection
|
[End Circuit Call]
|
|=============================================================================
```

Section 7

P A C K A G E M O D E L I N G

The [Package Model] keyword is optional. If more than the default RLC package model is desired, use the [Define Package Model] keyword.

Use the [Package Model] keyword within a [Component] to indicate the package model for that component. The specification permits .ibs files to contain the following additional list of package model keywords. Note that the actual package models can be in a separate <package_file_name>.pkg file or can exist in the IBIS files between the [Define Package Model] ... [End Package Model] keywords for each package model that is defined. For reference, these keywords are listed below. Full descriptions follow. EDA tools that do not support these keywords will ignore all entries between the [Define Package Model] and [End Package Model] keywords.

[Define Package Model]	Required if the [Package Model] keyword is used
[Manufacturer]	(note 1)
[OEM]	(note 1)
[Description]	(note 1)
[Number Of Sections]	(note 2)
[Number Of Pins]	(note 1)
[Pin Numbers]	(note 1)
[Model Data]	(note 2)
[Resistance Matrix]	Optional when [Model Data] is used
[Inductance Matrix]	(note 3)
[Capacitance Matrix]	(note 3)
[Bandwidth]	Required (for Banded_matrix matrices only)
[Row]	(note 3)
[End Model Data]	(note 2)
[End Package Model]	(note 1)

(note 1) Required when the [Define Package Model] keyword is used

(note 2) Either the [Number Of Sections] or the [Model Data]/[End Model Data] keywords are required. Note that [Number of Sections] and the [Model Data]/[End Model Data] keywords are mutually exclusive.

(note 3) Required when the [Define Package Model] keyword is used and the [Number Of Sections] keyword is not used.

When package model definitions occur within a .ibs file, their scope is "local" -- they are known only within that .ibs file and no other. In addition, within that .ibs file, they override any globally defined package models that have the same name.

USAGE RULES FOR THE .PKG FILE:

Package models are stored in a file whose name looks like:

  <filename>.pkg.

| The <filename> provided must adhere to the rules given in Section 3, GENERAL
| SYNTAX RULES AND GUIDELINES. Use the ".pkg" extension to identify files
| containing package models. The .pkg file must contain all of the required
| elements of a normal .ibs file, including [IBIS Ver], [File Name], [File
| Rev], and the [End] keywords. Optional elements include the [Date],
| [Source], [Notes], [Disclaimer], [Copyright], and [Comment Char] keywords.
| All of the elements follow the same rules as those for a normal .ibs file.
|
| Note that the [Component] and [Model] keywords are not allowed in the .pkg
| file. The .pkg file is for package models only.
|
|==
| **Keyword: [Define Package Model]**
| Required: Yes
| Description: Marks the beginning of a package model description.
| Usage Rules: If the .pkg file contains data for more than one package, each
| section must begin with a new [Define Package Model] keyword.
| The length of the package model name must not exceed 40
| characters in length. Blank characters are allowed. For
| every package model name defined under the [Package Model]
| keyword, there must be a matching [Define Package Model]
| keyword.
|--
[Define Package Model]   QS-SMT-cer-8-pin-pkgs
|
|==
| **Keyword: [Manufacturer]**
| Required: Yes
| Description: Declares the manufacturer of the component(s) that use this
| package model.
| Usage Rules: The length of the manufacturer's name must not exceed 40
| characters (blank characters are allowed, e.g., Texas
| Instruments). In addition, each manufacturer must use a
| consistent name in all .ibs and .pkg files.
|--
[Manufacturer] Quality Semiconductors Ltd.
|
|==
| **Keyword: [OEM]**
| Required: Yes
| Description: Declares the manufacturer of the package.
| Usage Rules: The length of the manufacturer's name must not exceed 40
| characters (blank characters are allowed). In addition, each
| manufacturer must use a consistent name in all .ibs and .pkg
| files.
| Other Notes: This keyword is useful if the semiconductor vendor sells a
| single IC in packages from different manufacturers.
|--
[OEM]   Acme Packaging Co.
|
|==

|==
| **Keyword: [Description]**
| Required: Yes
| Description: Provides a concise yet easily human-readable description of
| what kind of package the [Package Model] is representing.
| Usage Rules: The description must be less than 60 characters in length,
| must fit on a single line, and may contain spaces.
|--
[Description] 220-Pin Quad Ceramic Flat Pack
|
|==
| **Keyword: [Number Of Sections]**
| Required: No
| Description: Defines the maximum number of sections that make up a 'package
| stub'. A package stub is defined as the connection between
| the die pad and the corresponding package pin; it can include
| (but is not limited to) the bondwire, the connection between
| the bondwire and pin, and the pin itself. This keyword must
| be used if a modeler wishes to describe any package stub as
| other than a single, lumped L/R/C. The sections of a package
| stub are assumed to connect to each other in a series fashion.
| Usage Rules: The argument is a positive integer greater than zero. This
| keyword, if used, must appear in the specification before the
| [Pin Numbers] keyword. The maximum number of sections
| includes sections between the Fork and Endfork subparameters.
|--
[Number Of Sections] 3
|
|==
| **Keyword: [Number Of Pins]**
| Required: Yes
| Description: Tells the parser how many pins to expect.
| Usage Rules: The field must be a positive decimal integer. The [Number
| Of Pins] keyword must be positioned before the [Pin Numbers]
| keyword.
|--
[Number Of Pins] 128
|
|==
| **Keyword: [Pin Numbers]**
| Required: Yes
| Description: Tells the parser the set of names that are used for the
| package pins and also defines pin ordering. If the [Number Of
| Sections] keyword is present it also lists the elements for
| each section of a pin's die to pin connection.
| Sub-Params: Len, L, R, C, Fork, Endfork
| Usage Rules: Following the [Pin Numbers] keyword, the names of the pins are
| listed. There must be as many names listed as there are pins
| (as given by the preceding [Number Of Pins] keyword). Pin
| names can not exceed 5 characters in length. The first pin
| name given is the "lowest" pin, and the last pin given is the
| "highest." If the [Number Of Sections] keyword is used then
| each pin name must be followed by one or more of the legal
| subparameter combinations listed below. If the [Number Of
| Sections] keyword is not present then subparameter usage is
| NOT allowed.
|

Subparameters:

The Len, L, R, and C subparameters specify the length, inductance, capacitance and resistance of each section of each stub on a package.

The Fork and Endfork subparameters are used to denote branches from the main package stub.

Len The length of a package stub section. Lengths are given in terms of arbitrary 'units'.

L The inductance of a package stub section, in terms of 'inductance/unit length'. For example, if the total inductance of a section is 3.0nH and the length of the section is 2 'units', the inductance would be listed as L = 1.5nH (i.e. 3.0 / 2).

C The capacitance of a package stub section, in terms of capacitance per unit length.

R The DC (ohmic) resistance of a package stub section, in terms of ohms per unit length.

Fork This subparameter indicates that the sections following (up to the Endfork subparameter) are part of a branch off of the main package stub. This subparameter has no arguments.

Endfork This subparameter indicates the end point of a branch. For every Fork subparameter there must be a corresponding Endfork subparameter. As with the Fork subparameter, the Endfork subparameter has no arguments.

Specifying a Len or L/R/C value of zero is allowed. If Len = 0 is specified, then the L/R/C values are the total for that section. If a non-zero length is specified, then the total L/R/C for a section is calculated by multiplying the value of the Len subparameter by the value of the L, R, or C subparameter. However, if a non-zero length section is specified, the L and C for that section should be treated as distributed elements.

Using The Subparameters to Describe Package Stub Sections:

A section description begins with the Len subparameter and ends with the slash (/) character. The value of the Len, L, R, and C subparameters and the subparameter itself are separated by an equals sign (=); white space around the equals sign is optional. The Fork and Endfork subparameters are placed between section descriptions (i.e., between the concluding slash of one section and the 'Len' parameter that starts another). A particular section description can contain no data (i.e., the description is given as 'Len = 0 /').

Legal Subparameter Combinations for Section Descriptions:

A) A single Len = 0 subparameter, followed by a slash. This is used to describe a section with no data.

```
|               B)  Len, and one or more of the L, R and C subparameters.  If
|               the Len subparameter is given as zero, then the L/R/C
|               subparameters represent lumped elements.  If the Len
|               subparameter is non-zero, then the L/R/C subparameters
|               represent distributed elements.
|
|               C)  Single Fork or Endfork subparameter.  Normally, a package
|               stub is described as several sections, with the Fork and
|               Endfork subparameters surrounding a group of sections in the
|               middle of the complete package stub description.  However, it
|               is legal for the Fork/Endfork subparameters to appear at the
|               end of a section description.  The package pin is connected to
|               the last section of a package stub description not surrounded
|               by a Fork/Endfork statements.  See the examples below.
|
|               Package Stub Boundaries:
|
|               A package stub description starts at the connection to the die
|               and ends at the point at which the package pin interfaces with
|               the board or substrate the IC package is mounted on.  Note
|               that in the case of a component with through-hole pins, the
|               package stub description should include only the portion of
|               the pin not physically inserted into the board or socket.
|               However, it is legal for a package stub description to include
|               both the component and socket together if this is how the
|               component is intended to be used.
|-------------------------------------------------------------------------
| A three-section package stub description that includes a bond wire (lumped
| inductance), a trace (treated as a transmission line with DC resistance),
| and a pin modeled as a lumped L/C element.
|
[Pin Numbers]
A1 Len=0 L=1.2n/ Len=1.2 L=2.0n C=0.5p R=0.05/ Len=0 L=2.0n C=1.0p/
|
| Pin A2 below has a section with no data
|
A2 Len=0 L=1.2n/ Len=0/ Len=1.2 L=2.0n C=0.5p R=0.05/ Len=0 L=2.0n C=1.0p/
|
| A section description using the Fork and Endfork subparameters.  Note that
| the indentation of the Fork and Endfork subparameters are for readability
| are not required.
|
A1 Len=0 L=2.3n /         | bondwire
Len=1.2 L=1.0n C=2.5p /   | first section
 Fork                     | indicates the starting of a branch
 Len=1.0 L=2.0n C=1.5p /  | section
 Endfork                  | ending of the branch
Len=0.5 L=1.0 C=2.5p/     | second section
Len=0.0 L=1.5n /          | pin
|
```

```
| Here is an example where the Fork/Endfork subparameters are at the end of a
| package stub description.
|
B13 Len=0 L=2.3n /       | bondwire
Len=1.2 L=1.0n C=2.5p /  | first section
Len=0.5 L=1.0 C=2.5/     | second section, pin connects here
Fork                     | indicates the starting of a branch
Len=1.0 L=2.0n C=1.5p /  | section
Endfork                  | ending of the branch
|
|=============================================================================
|     Keyword:  [Model Data]
|    Required:  Yes
| Description:  Indicates the beginning of the formatted package model data,
|               that can include the [Resistance Matrix], [Inductance Matrix],
|               [Capacitance Matrix], [Bandwidth], and [Row] keywords.
|-----------------------------------------------------------------------------
[Model Data]
|
|=============================================================================
|     Keyword:  [End Model Data]
|    Required:  Yes
| Description:  Indicates the end of the formatted model data.
| Other Notes:  In between the [Model Data] and [End Model Data] keywords is
|               the package model data itself.  The data is a set of three
|               matrices: the resistance (R), inductance (L), and capacitance
|               (C) matrices.  Each matrix can be formatted differently (see
|               below).  Use one of the matrix keywords below to mark the
|               beginning of each new matrix.
|-----------------------------------------------------------------------------
[End Model Data]
|
|=============================================================================
|    Keywords:  [Resistance Matrix], [Inductance Matrix], [Capacitance Matrix]
|    Required:  [Resistance Matrix] is optional.  If it is not present, its
|               entries are assumed to be zero.  [Inductance Matrix] and
|               [Capacitance Matrix] are required.
|  Sub-Params:  Banded_matrix, Sparse_matrix, or Full_matrix
| Description:  The subparameters mark the beginning of a matrix, and specify
|               how the matrix data is formatted.
| Usage Rules:  For each matrix keyword, use only one of the subparameters.
|               After each of these subparameters, insert the matrix data in
|               the appropriate format.  (These formats are described in
|               detail below.)
| Other Notes:  The resistance, inductance, and capacitance matrices are also
|               referred to as "RLC matrices" within this specification.
|
|               When measuring the entries of the RLC matrices, either with
|               laboratory equipment or field-solver software, currents are
|               defined as ENTERING the pins of the package from the board
|               (General Syntax Rule #11).  The corresponding voltage drops
|               are to be measured with the current pointing "in" to the "+"
|               sign and "out" of the "-" sign.
|
```

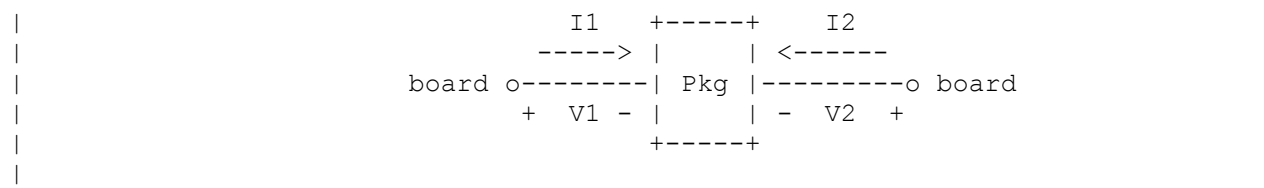

It is important to observe this convention in order to get the correct signs for the mutual inductances and resistances.

[Resistance Matrix]	Banded_matrix
[Inductance Matrix]	Sparse_matrix
[Capacitance Matrix]	Full_matrix

RLC MATRIX NOTES:

For each [Resistance Matrix], [Inductance Matrix], or [Capacitance Matrix] a different format can be used for the data. The choice of formats is provided to satisfy different simulation accuracy and speed requirements. Also, there are many packages in which the resistance matrix can have no coupling terms at all. In this case, the most concise format (Banded_matrix) can be used.

There are two different ways to extract the coefficients that are reported in the capacitance and inductance matrices. For the purposes of this specification, the coefficients reported in the capacitance matrices shall be the 'electrostatic induction coefficients' or 'Maxwell's capacitances'. The Maxwell capacitance Kij is defined as the charge induced on conductor "j" when conductor "i" is held at 1 volt and all other conductors are held at zero volts. Note that Kij (when i /= j) will be a negative number and should be entered as such. Likewise, for the inductance matrix the coefficients for Lij are defined as the voltage induced on conductor "j" when conductor "i"'s current is changed by 1amp/sec and all other conductors have no current change.

One common aspect of all the different formats is that they exploit the symmetry of the matrices they describe. This means that the entries below the main diagonal of the matrix are identical to the corresponding entries above the main diagonal. Therefore, only roughly one-half of the matrix needs to be described. By convention, the main diagonal and the UPPER half of the matrix are provided.

In the following text, we use the notation [I, J] to refer to the entry in row I and column J of the matrix. Note that I and J are allowed to be alphanumeric strings as well as integers. An ordering of these strings is defined in the [Pin Numbers] section. In the following text, "Row 1" means the row corresponding to the first pin.

Also note that the numeric entries of the RLC matrices are standard IBIS floating point numbers. As such, it is permissible to use metric "suffix" notation. Thus, an entry of the C matrix could be given as 1.23e-12 or as 1.23p or 1.23pF.

| Full_matrix:
|
| When the Full_matrix format is used, the couplings between every pair of
| elements is specified explicitly. Assume that the matrix has N rows and N
| columns. The Full_matrix is specified one row at a time, starting with
| Row 1 and continuing down to Row N.
|
| Each new row is identified with the Row keyword.
|
|==
| **Keyword: [Row]**
| Required: Yes
| Description: Indicates the beginning of a new row of the matrix.
| Usage Rules: The argument must be one of the pin names listed under the
| [Pin Numbers] keyword.
|--
[Row]   3
|
|==
| Following a [Row] keyword is a block of numbers that represent the entries
| for that row. Suppose that the current row is number M. Then the first
| number listed is the diagonal entry, [M,M]. Following this number are the
| entries of the upper half of the matrix that belong to row M: [M, M+1],
| [M, M+2], ... up to [M,N].
|
| For even a modest-sized package, this data will not all fit on one line.
| You can break the data up with new-line characters so that the 120
| character line length limit is observed.
|
| An example: suppose the package has 40 pins and that we are currently
| working on Row 19. There is 1 diagonal entry, plus 40 - 19 = 21 entries in
| the upper half of the matrix to be specified, for 22 entries total. The
| data might be formatted as follows:
|
[Row]   19
5.67e-9 1.1e-9 0.8e-9 0.6e-9 0.4e-9 0.2e-9   0.1e-9   0.09e-9
8e-10   7e-10   6e-10   5e-10   4e-10   3e-10   2e-10   1e-10
9e-11   8e-11   7e-11   6e-11   5e-11   4e-11
|
| In the above example, the entry 5.67e-9 is on the diagonal of row 19.
|
| Observe that Row 1 always has the most entries, and that each successive row
| has one fewer entry than the last; the last row always has just a single
| entry.
|
| Banded_matrix:
|
| A Banded_matrix is one whose entries are guaranteed to be zero if they are
| farther away from the main diagonal than a certain distance, known as the
| "bandwidth." Let the matrix size be N x M, and let the bandwidth be B.
| An entry [I,J] of the matrix is zero if:
|
| | I - J | > B
|
| where |.| denotes the absolute value.
|

| The Banded_matrix is used to specify the coupling effects up to B pins on
| either side. Two variations are supported. One allows for the coupling to
| circle back on itself. This is technically a simple form of a bordered
| block diagonal matrix. However, its data can be completely specified in
| terms of a Banded_matrix for an N x M matrix consisting of N rows and
| M = N + B columns. The second variation is just in terms of an N x N matrix
| where no circle back coupling needs to be specified.
|
| The bandwidth for a Banded_matrix must be specified using the [Bandwidth]
| keyword:
|
|===
| **Keyword: [Bandwidth]**
| Required: Yes (for Banded_matrix matrices only)
| Description: Indicates the bandwidth of the matrix.
| Usage Rules: The bandwidth field must be a non-negative integer. This
| keyword must occur after the [Resistance Matrix], etc.,
| keywords, and before the matrix data is given.
|---
[Bandwidth]   10
|
|===
| Specify the banded matrix one row at a time, starting with row 1 and working
| up to higher rows. Mark each row with the [Row] keyword, as above. As
| before, symmetry is exploited: do not provide entries below the main
| diagonal.
|
| For the case where coupling can circle back on itself, consider a matrix of
| N pins organized into N rows 1 ... N and M columns 1 ... N, 1 ... B. The
| first row only needs to specify the entries [1,1] through [1,1+B] since all
| other entries are guaranteed to be zero. The second row will need to
| specify the entries [2,2] through [2,2+B], and so on. For row K the
| entries [K,K] through [K,K+B] are given when K + B is less than or equal to
| the size of the matrix N. When K + B exceeds N, the entries in the last
| columns 1 ... B specify the coupling to the first rows. For row K, the
| entries [K,K] ... [K,N] [K,1] ... [K,R] are given where R =
| mod(K + B - 1, N) + 1. All rows will contain B + 1 entries. To avoid
| redundant entries, the bandwidth is limited to B <= int((N - 1) / 2).
|
| For the case where coupling does not circle back on itself, the process is
| modified. Only N columns need to be considered. When K + B finally exceeds
| the size of the matrix N, the number of entries in each row starts to
| decrease; the last row (row N) has only 1 entry. This construction
| constrains the bandwidth to B < N.
|
| As in the Full_matrix, if all the entries for a particular row do not fit
| into a single 120-character line, the entries can be broken across several
| lines.
|
| It is possible to use a bandwidth of 0 to specify a diagonal matrix (a
| matrix with no coupling terms.) This is sometimes useful for resistance
| matrices.
|

| Sparse_matrix:
|
| A Sparse_matrix is expected to consist mostly of zero-valued entries, except
| for a few nonzeros. Unlike the Banded_matrix, there is no restriction on
| where the nonzero entries can occur. This feature is useful in certain
| situations, such as for Pin Grid Arrays (PGAs).
|
| As usual, symmetry can be exploited to reduce the amount of data by
| eliminating from the matrix any entries below the main diagonal.
|
| An N x N Sparse_matrix is specified one row at a time, starting with row 1
| and continuing down to row N. Each new row is marked with the [Row]
| keyword, as in the other matrix formats.
|
| Data for the entries of a row is given in a slightly different format,
| however. For the entry [I, J] of a row, it is necessary to explicitly list
| the name of pin J before the value of the entry is given. This
| specification serves to indicate to the parser where the entry is put into
| the matrix.
|
| The proper location is not otherwise obvious because of the lack of
| restrictions on where nonzeros can occur. Each (Index, Value) pair is
| listed upon a separate line. An example follows. Suppose that row 10 has
| nonzero entries [10,10], [10,11], [10,15], and [10,25]. The following row
| data would be provided:
|
[Row]   10
| Index   Value
10   5.7e-9
11   1.1e-9
15   1.1e-9
25   1.1e-9
|
| Note that each of the column indices listed for any row must be greater than
| or equal to the row index, because they always come from the upper half of
| the matrix. When alphanumeric pin names are used, special care must be
| taken to ensure that the ordering defined in the [Pin Numbers] section is
| observed.
|
| With this convention, please note that the Nth row of an N x N matrix has
| just a single entry (the diagonal entry).
|
|===
| **Keyword: [End Package Model]**
| Required: Yes
| Description: Marks the end of a package model description.
| Usage Rules: This keyword must come at the end of each complete package
| model description.
|
| Optionally, add a comment after the [End Package Model]
| keyword to clarify which package model has just ended. For
| example,
|

```
|               [Define Package Model]   My_Model
|               |
|               |  ... content of model ...
|               |
|               [End Package Model]     | end of My_Model
|-------------------------------------------------------------------------
[End Package Model]
|
|=========================================================================
|                           Package Model Example
|
| The following is an example of a package model file following the
| package modeling specifications.  For the sake of brevity, an 8-pin package
| has been described.  For purposes of illustration, each of the matrices is
| specified using a different format.
|
|=========================================================================
|
[IBIS Ver]      4.1
[File Name]     example.pkg
[File Rev]      0.1
[Date]          January 30, 2004
[Source]        Quality Semiconductors.  Data derived from Helmholtz Inc.'s
                field solver using 3-D Autocad model from Acme Packaging.
[Notes]         Example of couplings in packaging
[Disclaimer]    The models given below may not represent any physically
                realizable 8-pin package.  They are provided solely for the
                purpose of illustrating the .pkg file format.
|
|=========================================================================
|
[Define Package Model]  QS-SMT-cer-8-pin-pkgs
[Manufacturer]          Quality Semiconductors Ltd.
[OEM]                   Acme Package Co.
[Description]           8-Pin ceramic SMT package
[Number Of Pins]        8
|
[Pin Numbers]
1
2
3
4
5
6
7
8
|
```

```
[Model Data]
|
| The resistance matrix for this package has no coupling
|
[Resistance Matrix]     Banded_matrix
[Bandwidth]             0
[Row]   1
10.0
[Row]   2
15.0
[Row]   3
15.0
[Row]   4
10.0
[Row]   5
10.0
[Row]   6
15.0
[Row]   7
15.0
[Row]   8
10.0
|
| The inductance matrix has loads of coupling
|
[Inductance Matrix]     Full_matrix
[Row]   1
3.04859e-07      4.73185e-08      1.3428e-08     6.12191e-09
1.74022e-07      7.35469e-08     2.73201e-08     1.33807e-08
[Row]   2
3.04859e-07      4.73185e-08      1.3428e-08     7.35469e-08
1.74022e-07      7.35469e-08     2.73201e-08
[Row]   3
3.04859e-07      4.73185e-08     2.73201e-08     7.35469e-08
1.74022e-07      7.35469e-08
[Row]   4
3.04859e-07      1.33807e-08     2.73201e-08     7.35469e-08
1.74022e-07
[Row]   5
4.70049e-07      1.43791e-07     5.75805e-08     2.95088e-08
[Row]   6
4.70049e-07      1.43791e-07     5.75805e-08
[Row]   7
4.70049e-07      1.43791e-07
[Row]   8
4.70049e-07
|
```

```
| The capacitance matrix has sparse coupling
|
[Capacitance Matrix]    Sparse_matrix
[Row]   1
1       2.48227e-10
2       -1.56651e-11
5       -9.54158e-11
6       -7.15684e-12
[Row]   2
2       2.51798e-10
3       -1.56552e-11
5       -6.85199e-12
6        -9.0486e-11
7       -6.82003e-12
[Row]   3
3       2.51798e-10
4       -1.56651e-11
6       -6.82003e-12
7        -9.0486e-11
8       -6.85199e-12
[Row]   4
4       2.48227e-10
7       -7.15684e-12
8       -9.54158e-11
[Row]   5
5       1.73542e-10
6       -3.38247e-11
[Row]   6
6       1.86833e-10
7       -3.27226e-11
[Row]   7
7       1.86833e-10
8       -3.38247e-11
[Row]   8
8       1.73542e-10
|
[End Model Data]
[End Package Model]
|
|=============================================================================
```

|==========
|==========
|

Section 8

|
| E L E C T R I C A L B O A R D D E S C R I P T I O N
|
|==========
|==========
|
| A "board level component" is the generic term to be used to describe a
| printed circuit board (PCB) or substrate which can contain components or
| even other boards, and which can connect to another board through a set of
| user visible pins. The electrical connectivity of such a board level
| component is referred to as an "Electrical Board Description". For example,
| a SIMM module is a board level component that is used to attach several DRAM
| components on the PCB to another board through edge connector pins. An
| electrical board description file (a .ebd file) is defined to describe the
| connections of a board level component between the board pins and its
| components on the board.
|
| A fundamental assumption regarding the electrical board description is that
| the inductance and capacitance parameters listed in the file are derived
| with respect to well-defined reference plane(s) within the board. Also,
| this current description does not allow one to describe electrical
| (inductive or capacitive) coupling between paths. It is recommended that if
| coupling is an issue, then an electrical description be extracted from the
| physical parameters of the board.
|
| What is, and is not, included in an Electrical Board Description is defined
| by its boundaries. For the definition of the boundaries, see the
| Description section under the [Path Description] Keyword.
|
| USAGE RULES:
|
| A .ebd file is intended to be a stand-alone file, not associated with any
| .ibs file. Electrical Board Descriptions are stored in a file whose name
| looks like <filename>.ebd, where <filename> must conform to the naming rules
| given in the General Syntax Section of this specification. The .ebd
| extension is mandatory.
|
| CONTENTS:
|
| A .ebd file is structured similar to a standard IBIS file. It must contain
| the following keywords, as defined in the IBIS specification: [IBIS Ver],
| [File Name], [File Rev], and [End]. It may also contain the following
| optional keywords: [Comment Char], [Date], [Source], [Notes], [Disclaimer],
| and [Copyright]. The actual board description is contained between the
| keywords [Begin Board Description] and [End Board Description], and includes
| the keywords listed below:
|

```
|   [Begin Board Description]
|   [Manufacturer]
|   [Number Of Pins]
|   [Pin List]
|   [Path Description]
|   [Reference Designator Map]
|   [End Board Description]
|
| More than one [Begin Board Description]/[End Board Description] keyword pair
| is allowed in a .ebd file.
|
|=============================================================================
|     Keyword:  [Begin Board Description]
|    Required:  Yes
| Description:  Marks the beginning of an Electrical Board Description.
| Usage Rules:  The keyword is followed by the name of the board level
|               component.  If the .ebd file contains more than one [Begin
|               Board Description] keyword, then each name must be unique.
|               The length of the component name must not exceed 40 characters
|               in length, and blank characters are allowed.  For every
|               [Begin Board Description] keyword there must be a matching
|               [End Board Description] keyword.
|-----------------------------------------------------------------------------
[Begin Board Description]  16Meg X 8 SIMM Module
|
|=============================================================================
|     Keyword:  [Manufacturer]
|    Required:  Yes
| Description:  Declares the manufacturer of the components(s) that use this
|               .ebd file.
| Usage Rules:  Following the keyword is the manufacturer's name.  It must not
|               exceed 40 characters, and can include blank characters.  Each
|               manufacturer must use a consistent name in all .ebd files.
|-----------------------------------------------------------------------------
[Manufacturer] Quality SIMM Corp.
|
|=============================================================================
|     Keyword:  [Number Of Pins]
|    Required:  Yes
| Description:  Tells the parser the number of pins to expect.  Pins are any
|               externally accessible electrical connection to the component.
| Usage Rules:  The field must be a positive decimal integer.  Note: The
|               simulator must not limit the Number Of Pins to any value less
|               than 1,000.  The [Number Of Pins] keyword must be positioned
|               before the [Pin List] keyword.
|-----------------------------------------------------------------------------
[Number Of Pins] 128
|
|=============================================================================
```

|==
| **Keyword: [Pin List]**
| Required: Yes
| Description: Tells the parser the pin names of the user accessible pins.
| It also informs the parser which pins are connected to power
| and ground.
| Sub-Params: signal_name
| Usage Rules: Following the [Pin List] keyword are two columns. The first
| column lists the pin name while the second lists the data book
| name of the signal connected to that pin. There must be as
| many pin_name/signal_name rows as there are pins given by the
| preceding [Number Of Pins] keyword. Pin names must be the
| alphanumeric external pin names of the part. The pin names
| cannot exceed eight characters in length. Any pin associated
| with a signal name that begins with "GND" or "POWER" will be
| interpreted as connecting to the boards ground or power plane.
| In addition, NC is a legal signal name and indicates that the
| Pin is a 'no connect'. As per the IBIS standard "GND",
| "POWER" and "NC" are case insensitive.
|--
| A SIMM Board Example:
|
[Pin List] signal_name
A1 GND
A2 data1
A3 data2
A4 POWER5 | This pin connects to 5 V
A5 NC | a no connect pin
| .
| .
A22 POWER3.3 | This pin connects to 3.3 V
B1 casa
| .
| .
|etc.
|
|==
| **Keyword: [Path Description]**
| Required: Yes
| Description: This keyword allows the user to describe the connection
| between the user accessible pins of a board level component
| and other pins or pins of the ICs mounted on that board. Each
| pin to node connection is divided into one or more cascaded
| "sections", where each section is described in terms of its
| L/R/C per unit length. The Fork and Endfork subparameters
| allow the path to branch to multiple nodes, or another pin. A
| path description is required for each pin whose signal name is
| not "GND", "POWER" or "NC".
|
| Board Description and IC Boundaries:
|
| In any system, each board level component interfaces with
| another board level component at some boundary. Every
| electrical board description must contain the components
| necessary to represent the behavior of the board level
| component being described within its boundaries. The boundary
| definition depends upon the board level component being

described.

For CARD EDGE CONNECTIONS such as a SIMM or a PC Daughter Card plugged into a SIMM Socket or Edge Connector, the boundary should be at the end of the board card edge pads as they emerge from the connector.

For any THROUGH-HOLE MOUNTED COMPONENT, the boundary will be at the surface of the board on which the component is mounted.

SURFACE MOUNTED COMPONENT models end at the outboard end of their recommended surface mount pads.

If the board level component contains an UNMATED CONNECTOR, the unmated connector will be described in a separate file, with its boundaries being as described above for the through-hole or surface mounted component.

Sub-Params: Len, L, R, C, Fork, Endfork, Pin, Node

Usage Rules: Each individual connection path (user pin to node(s)) description begins with the [Path Description] keyword and a path name, followed by the subparameters used to describe the path topology and the electrical characteristics of each section of the path. The path name must not exceed 40 characters, blanks are not allowed, and each occurrence of the [Path Description] keyword must be followed by a unique path name. Every signal pin (pins other than POWER, GND or NC) must appear in one and only one path description per [Begin Board Description]/[End Board Description] pair. Pin names do not have to appear in the same order as listed in the [Pin List] table. The individual subparameters are broken up into those that describe the electrical properties of a section, and those that describe the topology of a path.

Section Description Subparameters:

The Len, L, R, and C subparameters specify the length, the series inductance, resistance, and the capacitance to ground of each section in a path description.

Len The physical length of a section. Lengths are given in terms of arbitrary 'units'. Any non-zero length requires that the parameters that follow must be interpreted as distributed elements by the simulator.

L The series inductance of a section, in terms of 'inductance/unit length'. For example, if the total inductance of a section is 3.0 nH and the length of the section is 2 'units', the inductance would be listed as L = 1.5 nH (i.e. 3.0 / 2).

C The capacitance to ground of a section, in terms of capacitance per unit length.

R The series DC (ohmic) resistance of a section, in terms of ohms per unit length.

Topology Description Subparameters:

The Fork and Endfork subparameters denote branches from the

main pin-to-node or pin-to-pin connection path. The Node subparameter is used to reference the pin of a component or board as defined in a .ibs or .ebd file. The Pin subparameter is used to indicate the point at which a path connects to a user visible pin.

Fork This subparameter indicates that the sections following (up to the Endfork subparameter) are part of a branch off of the main connection path. This subparameter has no arguments.

Endfork This subparameter indicates the end point of a branch. For every Fork subparameter there must be a corresponding Endfork subparameter. As with the Fork subparameter, the Endfork subparameter has no arguments. The Fork and Endfork parameters must appear on separate lines.

Node reference_designator.pin
This subparameter is used when the connection path connects to a pin of another, externally defined component. The arguments of the Node subparameter indicate the pin and reference designator of the external component. The pin and reference designator portions of the argument are separated by a period (".."). The reference designator is mapped to an external component description (another .ebd file or .ibs file) by the [Reference Designator Map] Keyword. Note that a Node MUST reference a model of a passive or active component. A Node is not an arbitrary connection point between two elements or paths.

Pin This subparameter is used to mark the point at which a path description connects to a user accessible pin. Every path description must contain at least one occurrence of the Pin subparameter. It may also contain the reserved word NC. The value of the Pin subparameter must be one of the pin names listed in the [Pin List] section.

Note: The reserved word NC can also be used in path descriptions in a similar manner as the subparameters in order to terminate paths. This usage is optional.

Using The Subparameters to Describe Paths:

A section description begins with the Len subparameter and ends with the slash (/) character. The value of the Len, L, R, and C subparameters and the subparameter itself are separated by an equals sign (=); white space around the equals sign is optional. The Fork, Endfork, Node and Pin subparameters are placed between section descriptions (i.e., between the concluding slash of one section and the 'Len' parameters that starts another). The arguments of the Pin and Node subparameter are separated by white space.

Specifying a Len or L/R/C value of zero is allowed. If Len = 0 is specified, then the L/R/C values are the total for that section. If a non-zero length is specified, then the total L/R/C for a section is calculated by multiplying the

| value of the Len subparameter by the value of the L, R, or C
| subparameter. However, as noted below, if a non-zero length
| is specified, that section MUST be interpreted as distributed
| elements.
|
| Legal Subparameter Combinations for Section Descriptions:
|
| A) Len, and one or more of the L, R and C subparameters. If
| the Len subparameter is given as zero, then the L/R/C
| subparameters represent lumped elements. If the Len
| subparameter is non-zero, then the L/R/C subparameters
| represent distributed elements and both L and C must be
| specified, R is optional. The segment Len ..../ must
| not be split; the whole segment must be on one line.
|
| B) The first subparameter following the [Path Description]
| keyword must be 'Pin', followed by one or more section
| descriptions. The path description can terminate in a Node,
| another pin or the reserved word, NC. However, NC may be
| optionally omitted.
|
| Dealing With Series Elements:
|
| A discrete series R or L component can be included in a path
| description by defining a section with Len=0 and the proper R
| or L value. A discrete series component can also be included
| in a path description by writing two back to back node
| statements that reference the same component (see the example
| below). Note that both ends of a discrete, two terminal
| component MUST be contained in a single [Path Description].
| Connecting two separate [Path Description]s with a series
| component is not allowed.
|---

```
|  An Example Path For a SIMM Module:
|
[Path Description] CAS_2
Pin J25
Len = 0.5 L=8.35n C=3.34p R=0.01 /
Node u21.15
Len = 0.5 L=8.35n C=3.34p R=0.01 /
Node u22.15
Len = 0.5 L=8.35n C=3.34p R=0.01 /
Node u23.15
|
|        +-------------------------------------------------------------
|        |
|        |
|   J25 <---------O_______O---+---O_______O---+---O_______O---+
|        |         Len=0.5    |    Len=0.5    |    Len=0.5    |
|        |                    |               |               |
|        |                 +--+--+         +--+--+         +--+--+
|        |                 |Pin15|         |Pin15|         |Pin15|
|        |                 |     |         |     |         |     |
|        |                 | U21 |         | U22 |         | U23 |
|        |                 |     |         |     |         |     |
|        |
|
|  A Description Using The Fork and Endfork Subparameters:
|
[Path Description] PassThru1
Pin B5
Len = 0   L=2.0n /
Len = 2.1 L=6.0n C=2.0p /
 Fork
 Len = 1.0 L = 1.0n C= 2.0p /
 Node u23.16
 Endfork
Len = 1.0 L = 6.0n C=2.0p /
Pin A5
|
```

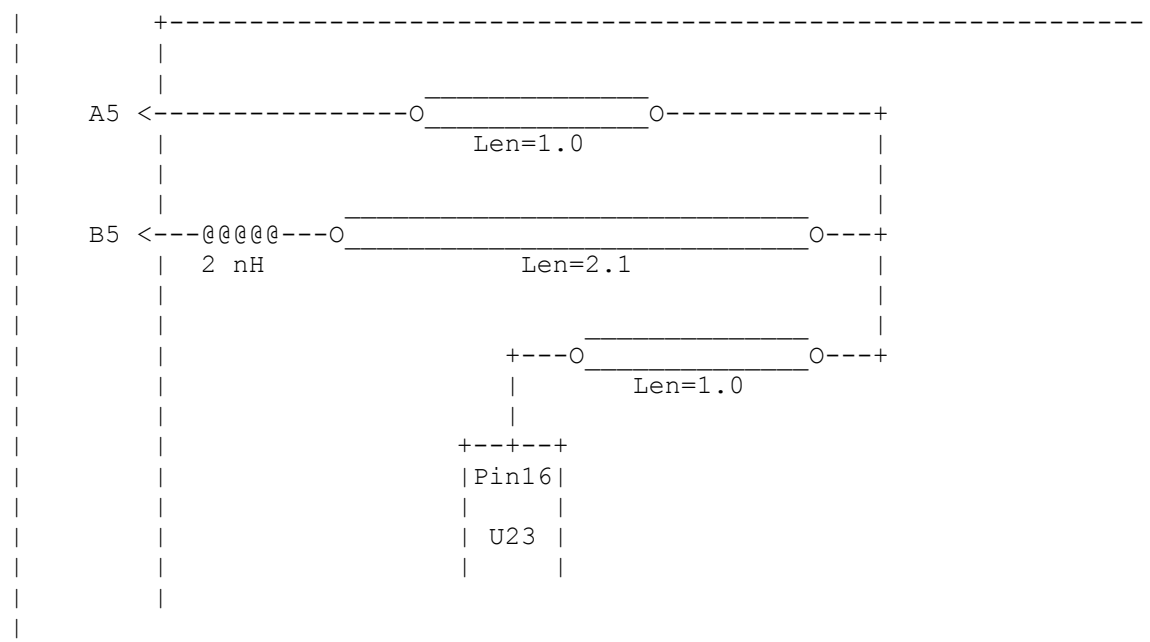

A Description Including a Discrete Series Element:

```
[Path Description] sig1
Pin B27
Len = 0  L=1.6n /
Len = 1.5 L=6.0n C=2.0p /
Node R2.1
Node R2.2
Len = 0.25 L=6.0n C=2.0p /
Node U25.6
```

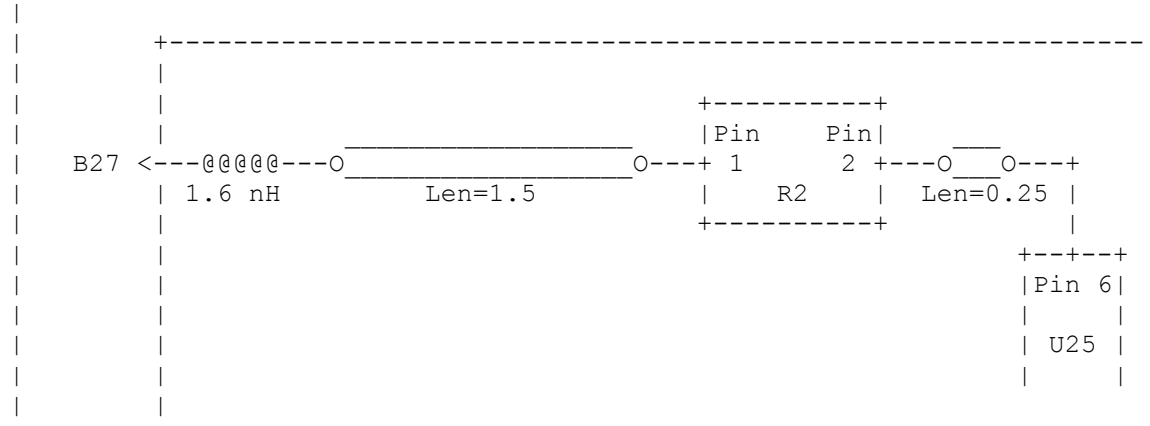

```
|=============================================================================
|     Keyword:  [Reference Designator Map]
|    Required:  Yes, if any of the path descriptions use the Node subparameter
| Description:  Maps a reference designator to a component or electrical board
|               description contained in an .ibs or .ebd file.
| Usage Rules:  The [Reference Designator Map] keyword must be followed by a
|               list of all of the reference designators called out by the
|               Node subparameters used in the various path descriptions.
|               Each reference designator is followed by the name of the .ibs
|               or .ebd file containing the electrical description of the
|               component or board, then the name of the component itself as
|               given by the .ibs or .ebd file's [Component] or [Begin Board
|               Description] keyword respectively.  The reference designator,
|               file name and component name terms are separated by white
|               space.  By default the .ibs or .ebd files are assumed to exist
|               in the same directory as the calling .ebd file. It is legal
|               for a reference designator to point to a component that is
|               contained in the calling .ebd file.
|
|               The reference designator is limited to ten characters.
|-----------------------------------------------------------------------------
[Reference Designator Map]
|
|  External Part References:
|
| Ref Des  File name   Component name
u23        pp100.ibs   Pentium(R)__Pro_Processor
u24        simm.ebd    16Meg X 36 SIMM Module
u25        ls244.ibs   National 74LS244a
u26        r10K.ibs    My_10K_Pullup
|
|=============================================================================
|     Keyword:  [End Board Description]
|    Required:  Yes
| Description:  Marks the end of an Electrical Interconnect Description.
| Usage Rules:  This keyword must come at the end of each complete electrical
|               interconnect model description.
|
|               Optionally, a comment may be added after the [End Electrical
|               Description] keyword to clarify which board model has
|               ended.
|-----------------------------------------------------------------------------
[End Board Description]        | End: 16Meg X 8 SIMM Module
|
|=============================================================================
|     Keyword:  [End]
|    Required:  Yes
| Description:  Defines the end of the .ibs, .pkg, or .ebd file.
|-----------------------------------------------------------------------------
[End]
|
|=============================================================================
```

```
|==============================================================================
|==============================================================================
|
```

Section 9

```
|
|    N O T E S   O N   D A T A   D E R I V A T I O N   M E T H O D
|
|==============================================================================
|==============================================================================
|
| This section explains how data values are derived.  It describes certain
| assumed parameter and table extraction conditions if they are not explicitly
| specified.  It also describes the allocation of data into the "typ", "min",
| and "max" columns under variations of voltage, temperature, and process.
|
| The required "typ" column for all data represents typical operating
| conditions.  For most [Model] keyword data, the "min" column describes slow,
| weak performance, and  the "max" column describes the fast, strong
| performance.  It is permissible to use slow, weak components or models to
| derive the data for the "min" column, and to use fast, strong components or
| models to derive the data in the "max" columns under the corresponding
| voltage and temperature derating conditions for these columns.  It is also
| permissible to use typical components or models derated by voltage and
| temperature and optionally apply proprietary "X%" and "Y%" factors described
| later for further derating.  This methodology has the nice feature that the
| data can be derived either from semiconductor vendor proprietary models, or
| typical component measurement over temperature/voltage.
|
| The voltage and temperature keywords and optionally the process models
| control the conditions that define the "typ", "min", and "max" column
| entries for all I-V table keywords [Pulldown], [Pullup], [GND Clamp], and
| [POWER Clamp]; all [Ramp] subparameters dV/dt_r and dV/dt_f; and all
| waveform table keywords and subparameters [Rising Waveform], [Falling
| Waveform], V_fixture, V_fixture_min, and V_fixture_max.
|
| The voltage keywords that control the voltage conditions are [Voltage
| Range], [Pulldown Reference], [Pullup Reference], [GND Clamp Reference], and
| [POWER Clamp Reference].  The entries in the "min" columns contain the
| smallest magnitude voltages, and the entries in the "max" columns contain
| the largest magnitude voltages.
|
| The optional [Temperature Range] keyword will contain the temperature which
| causes or amplifies the slow, weak conditions in the "min" column and the
| temperature which causes or amplifies the fast, strong conditions in the
| "max" column.  Therefore, the "min" column for [Temperature Range] will
| contain the lowest value for bipolar models (TTL and ECL) and the highest
| value for CMOS models.  Default values described later are assumed if
| temperature is not specified.
|
| The "min" and "max" columns for all remaining keywords and subparameters
| will contain the smallest and largest magnitude values.  This applies to the
| [Model] subparameter C_comp as well even if the correlation to the voltage,
| temperature, and process variations are known because information about such
| correlation is not available in all cases.
|
| C_comp is considered an independent variable.  This is because C_comp
| includes bonding pad capacitance, which does not necessarily track
```

| fabrication process variations. The conservative approach to using IBIS
| data will associate large C_comp values with slow, weak models, and the
| small C_comp values with fast, strong models.
|
| The default temperatures under which all I-V tables are extracted are
| provided below. The same defaults also are stated for the [Ramp]
| subparameters, but they also apply for the waveform keywords.
|
| The stated voltage ranges for I-V tables cover the most common, single
| supply cases. When multiple supplies are specified, the voltages shall
| extend similarly to values that handle practical extremes in reflected wave
| simulations.
|
| For the [Ramp] subparameters, the default test load and voltages are
| provided. However, the test load can be entered directly by the R_load
| subparameter. The allowable test loads and voltages for the waveform
| keywords are stated by required and optional subparameters; no defaults are
| needed. Even with waveform keywords, the [Ramp] keyword continues to be
| required so that the IBIS model remains functional in situations which do
| not support waveform processing.
|
| The following discussion lists test details and default conditions.
|
| 1) I-V Tables:
| I-V tables for CMOS models:
| typ = typical voltage, typical temp deg C, typical process
| min = minimum voltage, max temp deg C, typical process, minus "X%"
| max = maximum voltage, min temp deg C, typical process, plus "X%"
|
| I-V tables for bipolar models:
| typ = typical voltage, typical temp deg C, typical process
| min = minimum voltage, min temp deg C, typical process, minus "X%"
| max = maximum voltage, max temp deg C, typical process, plus "X%"
|
| Nominal, min, and max temperature are specified by the semiconductor
| vendor. The default range is 50 deg C nom, 0 deg C min, and 100 deg C
| max temperatures.
|
| X% should be statistically determined by the semiconductor vendor based
| on numerous fab lots, test chips, process controls, etc.. The value of X
| need not be published in the IBIS file, and may decrease over time as
| data on the I/O buffers and silicon process increases.
|
| Temperatures are junction temperatures.
|
| 2) Voltage Ranges:
| Points for each table must span the voltages listed below:
|

Table	Low Voltage	High Voltage
[Pulldown]	GND - POWER	POWER + POWER
[Pullup]	GND - POWER	POWER + POWER
[GND Clamp]	GND - POWER	GND + POWER
[POWER Clamp]	POWER	POWER + POWER
[Series Current]	GND - POWER	GND + POWER
[Series MOSFET]	GND	GND + POWER

|

| As described in the [Pulldown Reference] keyword section, the I-V tables
| of the [Pullup] and the [POWER Clamp] structures are 'Vcc relative',
| using the equation: Vtable = Vcc - Voutput.
|
| For example, a model with a 5 V power supply voltage should be
| characterized between (0 - 5) = -5 V and (5 + 5) = 10 V; and a model with
| a 3.3 V power supply should be characterized between (0 - 3.3) = -3.3 V
| and (3.3 + 3.3) = 6.6 V for the [Pulldown] table.
|
| When tabulating output data for ECL type models, the voltage points must
| span the range of Vcc to Vcc - 2.2 V. This range applies to both the
| [Pullup] and [Pulldown] tables. Note that this range applies ONLY when
| characterizing an ECL output.
|
| These voltage ranges must be spanned by the IBIS data. Data derived from
| lab measurements may not be able to span these ranges as such and so may
| need to be extrapolated to cover the full range. This data must not be
| left for the simulator to provide.
|
| 3) Ramp Rates:
| The following steps assume that the default load resistance of 50 ohms is
| used. There may be models that will not drive a load of only 50 ohms
| into any useful level of dynamics. In these cases, use the semiconductor
| vendor's suggested (nonreactive) load and add the load subparameter to
| the [Ramp] specification.
|
| The ramp rate does not include packaging but does include the effects of
| the C_comp parameter; it is the intrinsic output stage rise and fall time
| only.
|
| The ramp rates (listed in AC characteristics below) should be derived as
| follows:
|
| a. If starting with the silicon model, remove all packaging. If starting
| with a packaged model, perform the measurements as outlined below.
| Then use whatever techniques are appropriate to derive the actual,
| unloaded rise and fall times.
|
| b. If: The Model_type is one of the following: Output, I/O, or 3-state
| (not open or ECL types);
| Then: Attach a 50 ohm resistor to GND to derive the rising edge
| ramp. Attach a 50 ohm resistor to POWER to derive the
| falling edge ramp.
|
| If: The Model_type is Output_ECL, I/O_ECL, 3-state_ECL;
| Then: Attach a 50 ohm resistor to the termination voltage
| (Vterm = VCC - 2 V). Use this load to derive both the
| rising and falling edges.
|
| If: The Model_type is either an Open_sink type or Open_drain type;
| Then: Attach either a 50 ohm resistor or the semiconductor vendor
| suggested termination resistance to either POWER or the
| suggested termination voltage. Use this load to derive both
| the rising and falling edges.
|

| If: The Model_type is an Open_source type;
| Then: Attach either a 50 ohm resistor or the semiconductor vendor suggested termination resistance to either GND or the suggested termination voltage. Use this load to derive both the rising and falling edges.
|
| c. Due to the resistor, output swings will not make a full transition as expected. However the pertinent data can still be collected as follows:
| 1) Determine the 20% to 80% voltages of the 50 ohm swing.
| 2) Measure this voltage change as "dV".
| 3) Measure the amount of time required to make this swing "dt".
|
| d. Post the value as a ratio "dV/dt". The simulator extrapolates this value to span the required voltage swing range in the final model.
|
| e. Typ, Min, and Max must all be posted, and are derived at the same extremes as the I-V tables, which are:
|
| Ramp rates for CMOS models:
| typ = typical voltage, typical temp deg C, typical process
| min = minimum voltage, max temp deg C, typical process, minus "Y%"
| max = maximum voltage, min temp deg C, typical process, plus "Y%"
|
| Ramp rates for bipolar models:
| typ = typical voltage, typical temp deg C, typical process
| min = minimum voltage, min temp deg C, typical process, minus "Y%"
| max = maximum voltage, max temp deg C, typical process, plus "Y%"
|
| where nominal, min, and max temp are specified by the semiconductor vendor. The preferred range is 50 deg C nom, 0 deg C min, and 100 deg C max temperatures.
|
| Note that the derate factor, "Y%", may be different than that used for the I-V table data. This factor is similar to the X% factor described above. As in the case of I-V tables, temperatures are junction temperatures.
|
| f. During the I-V measurements, the driving waveform should have a rise/fall time fast enough to avoid thermal feedback. The specific choice of sweep time is left to the modeling engineer.
|
| 4) Transit Time Extractions:
| The transit time parameter is indirectly derived to be the value that produces the same effect as that extracted by the reference measurement or reference simulation.
|
| The test circuit consists of the following:
| a) A pulse source (10 ohms, 1 ns at full duration ramp) or equivalent and transitioning between Vcc and 0 V,
| b) A 50 ohm, 1 ns long trace or transmission line,
| c) A 500 ohm termination to the ground clamp reference voltage for TTgnd extraction and to the power clamp reference voltage for TTpower extraction (to provide a convenient, minimum loading 450 ohm - 50 ohm divider for high-speed sampling equipment observation of the component denoted as the device under test), and
| d) The device under test (DUT).

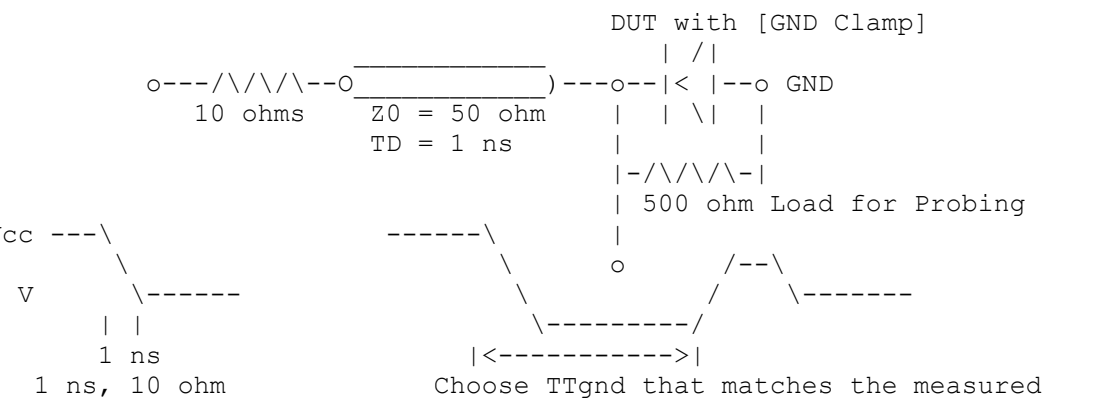

Example of TTgnd Extraction Setup

The TTgnd extraction will be done only if a [GND Clamp] table exists. A high to low transition that produces a positive "glitch", perhaps several nanoseconds later indicates a stored charge in the ground clamp circuit. The test circuit is simulated using the complete IBIS model with C_comp and the Ct model defined under the [TTgnd] and [TTpower] keywords. An effective TTgnd value that produces a "glitch" with the same delay is extracted.

Similarly, the TTpower extraction will be done only if a [POWER Clamp] table exists. A low to high transition that produces a negative "glitch", perhaps several nanoseconds later indicates a stored charge in the power clamp circuit. An effective TTpower value that produces a glitch with the same delay is extracted.

It is preferred to do the extractions with the package parameters removed. However, if the extraction is done from measurements, then the package model should be included in the IBIS based simulation.

5) Series MOSFET Table Extractions:
   An extraction circuit is set up according to the figure below. The switch is configured into the 'On' state. This assumes that the Vcc voltage will be applied to the gate by internal logic. Designate one pin of the switch as the source node, and the other pin as the drain node. The Table Currents designated as Ids are derived directly as a function of the Vs voltage at the source node as Vs is varied from 0 to Vcc. This voltage is entered as a Vgs value as a consequence of the relationship Vtable = Vgs = Vcc - Vs. Vds is held constant by having a fixed voltage Vds between the drain and source nodes. Note, Vds > 0 V. The current flowing into the drain is tabulated in the table for the corresponding Vs points.

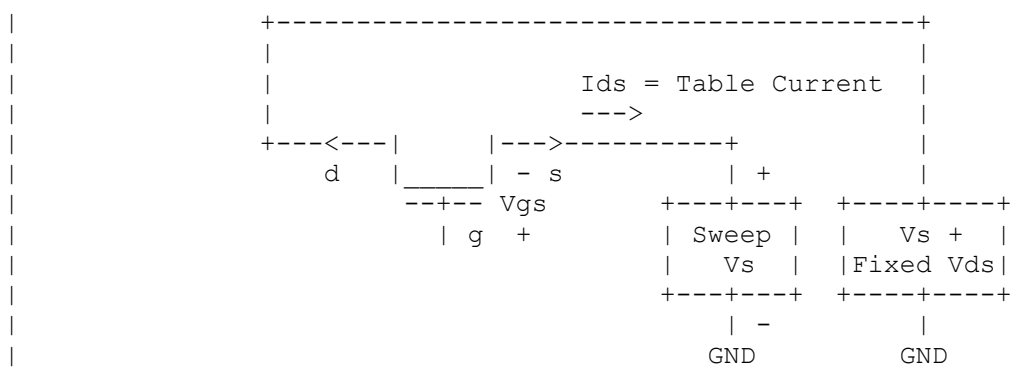

Example of Series MOSFET Table Extraction

It is expected that this data will be created from semiconductor vendor proprietary silicon models, and later correlated with actual component measurement.