TQFP (TQ128) Package

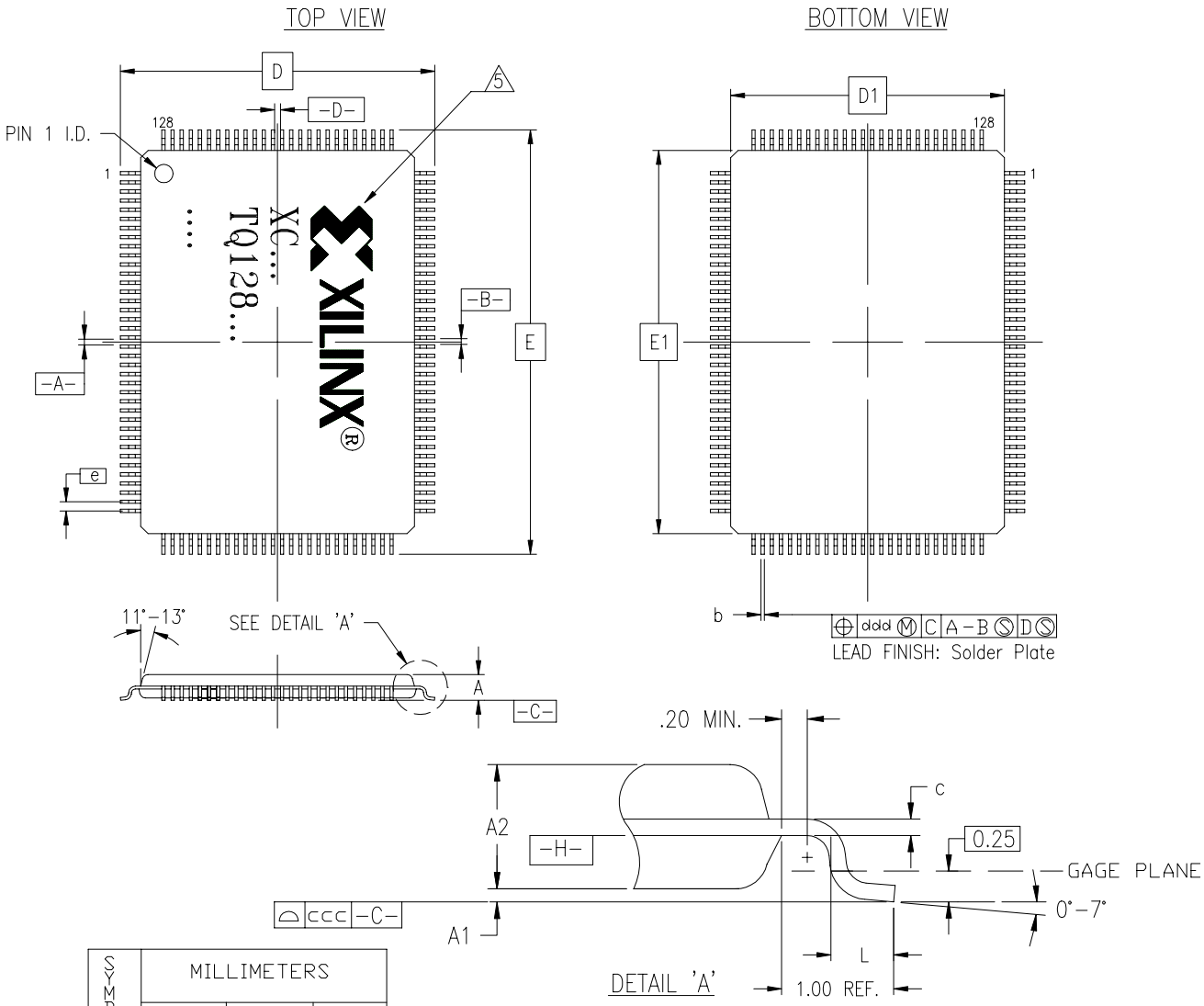

SYMBOL	MILLIMETERS		
	MIN.	NOM.	MAX.
A			1.60
A_1	0.05	0.10	0.15
A_2	1.35	1.40	1.45
D	16.00 BSC		
E	22.00 BSC		
D_1	14.00 BSC		
E_1	20.00 BSC		
b	0.17	0.22	0.27
c	0.09		0.20
e	0.50 BSC		
L	0.45	0.60	0.75
ccc			0.08
ddd			0.08

NOTES:

1. ALL DIMENSIONS AND TOLERANCES CONFORM TO ANSI Y14.5M-1982.
2. DIMENSIONS "D1" AND "E1" DO NOT INCLUDE MOLD PROTRUSION. ALLOWABLE MOLD PROTRUSION SHALL NOT EXCEED 0.25mm EACH SIDE.
3. THE TOP OF PACKAGE MAYBE SMALLER THAN THE BOTTOM OF PACKAGE BY 0.10mm.
4. THIS OUTLINE CONFORMS TO JEDEC PUBLICATION 95 REGISTRATION MS-026-BHB.

5. MARK ORIENTATION WITH RESPECT TO PIN-1 I.D. IF 2 OR MORE CIRCLES EXIST ON TOP OF THE PACKAGE, USE THE SMALLEST CIRCLE AS PIN-1 I.D.

128-PIN TQFP (TQ128)

© 2000 Xilinx, Inc. All rights reserved. All Xilinx trademarks, registered trademarks, patents, and disclaimers are as listed at http://www.xilinx.com/legal.htm.
All other trademarks and registered trademarks are the property of their respective owners. All specifications are subject to change without notice.