Low-Pass Filtering of Noisy Inputs
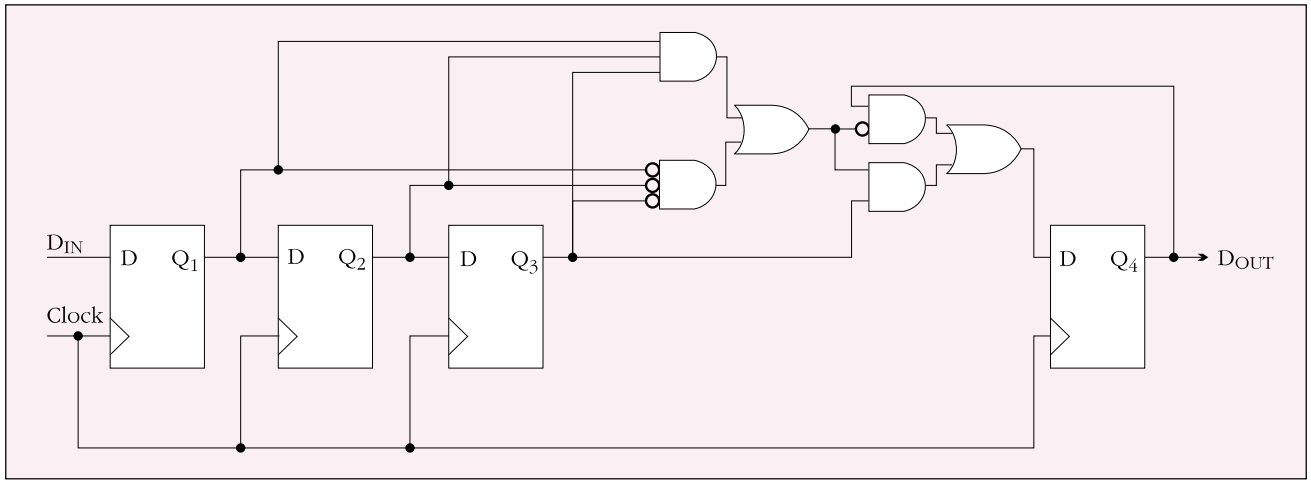
In the rare case of severe noise on a digital input, a low-pass filter, as illustrated, can clean up the signal, at the expense of additional throughput delay. This circuit uses two CLBs and recognizes an input change only after three successive samples have been identical. In other words, all disturbances shorter than two clock periods are guaranteed to be suppressed.